# in nanoBGA2

## Datasheet

**Revision 1.80**

**February 9, 2006**

**VIA TECHNOLOGIES, INC.**

***Designed by*** ***in Texas***

This is **Version 1.80** of the VIA C7 Processor Datasheet.

**© 2006 VIA Technologies, Inc** All Rights Reserved.

VIA reserves the right to make changes in its products without notice in order to improve design or performance characteristics.

This publication neither states nor implies any representations or warranties of any kind, including but not limited to any implied warranty of merchantability or fitness for a particular purpose. No license, express or implied, to any intellectual property rights is granted by this document.

VIA makes no representations or warranties with respect to the accuracy or completeness of the contents of this publication or the information contained herein, and reserves the right to make changes at any time, without notice. VIA disclaims responsibility for any consequences resulting from the use of the information included herein.

Cyrix and VIA C3 are trademarks of VIA Technologies, Inc.

CentaurHauls is a trademark of Centaur Technology Corporation.

AMD, AMD K6, and Athlon are trademarks of Advanced Micro Devices, Inc.

Microsoft and Windows are registered trademarks of Microsoft Corporation.

Intel, Pentium, Celeron, and MMX are registered trademarks of Intel Corporation.

Other product names used in this publication are for identification purposes only and may be trademarks of their respective companies.

VIA Technologies Inc.
Confidential
NDA Required

## LIFE SUPPORT POLICY

VIA processor products are not authorized for use as components in life support or other medical devices or systems (hereinafter life support devices) unless a specific written agreement pertaining to such intended use is executed between the manufacturer and an officer of VIA.

1. **Life support devices are devices which (a) are intended for surgical implant into the body or (b) support or sustain life and whose failure to perform, when properly used in accordance with instructions for use provided in the labeling, can be reasonably expected to result in a significant injury to the user.**
2. **This policy covers any component of a life support device or system whose failure to perform can cause the failure of the life support device or system, or to affect its safety or effectiveness.**

# Revision History

| Document Release | Date | Revision | Initials |
|---|---|---|---|
| 1.0 | 07/14/05 | Initial Release | CJH |
| 1.01 | 07/14/05 | Updated Table 2-3<br>Removed C7-M reference on page 17 | CJH |
| 1.6 | 12/25/05 | Updated Brand detection, Timing Diagrams, Power Consumption | CJH |
| 1.70 | 01/18/06 | Updated AC Timing descriptions | CJH |
| 1.80 | 02/09/06 | Added non-PowerSaver capable C7 | CJH |

VIA Technologies Inc.
Confidential
NDA Required

This page is intentionally left blank.

VIA Technologies Inc.
Confidential
NDA Required

# Table of Contents

**INTRODUCTION ..... 9**

1.1 BASIC FEATURES ..... 9
1.2 PROCESSOR VERSIONS ..... 10
1.3 COMPATIBILITY ..... 11

**PROGRAMMING INTERFACE ..... 13**

2.1 GENERAL ..... 13
2.2 ADDITIONAL FUNCTIONS ..... 15
2.3 MACHINE-SPECIFIC FUNCTIONS ..... 16
2.4 OMITTED FUNCTIONS ..... 23

**HARDWARE INTERFACE ..... 25**

3.1 BUS INTERFACE ..... 25
3.2 BALL DESCRIPTION ..... 27
3.3 POWER MANAGEMENT ..... 30
3.4 POWERSAVER ..... 31
3.5 JTAG ..... 31

**ELECTRICAL SPECIFICATIONS ..... 33**

4.1 DC SPECIFICATIONS ..... 33
4.2 AC TIMING TABLES AND WAVEFORMS ..... 37
4.3 POWER DISSIPATION ..... 52

**MECHANICAL SPECIFICATIONS ..... 55**

5.1 NANOBGA2 PACKAGE ..... 55

**THERMAL SPECIFICATIONS ..... 71**

6.1 INTRODUCTION ..... 71
6.2 TYPICAL ENVIRONMENTS ..... 71
6.3 MEASURING $T_C$ ..... 71
6.4 MEASURING $T_J$ ..... 72
6.5 ESTIMATING $T_C$ ..... 72
6.6 THERMAL MONITOR ..... 73

**MACHINE SPECIFIC REGISTERS ..... 75**

7.1 GENERAL ..... 75
7.2 CATEGORY 1 MSRS ..... 77
7.3 CATEGORY 2 MSRS ..... 80

VIA Technologies Inc.
Confidential
NDA Required

# List of Figures

Figure 3-1. Power Management State Diagram ..... 30
Figure 4-1.Vcc Loadline ..... 34
Figure 4-2. BCLK Generic Clock Timing Waveform ..... 37
Figure 4-3. FSB Common Clock Valid Delay Timings ..... 39
Figure 4-4. FSB Test Circuit ..... 39
Figure 4-5. Source Synchronous 4X Address Timings (CPU Source) ..... 41
Figure 4-6. Source Synchronous 4X Address Timings (CPU Target) ..... 41
Figure 4-7. Source Synchronous 4X Data Timings (CPU Source) ..... 42
Figure 4-8. Source Synchronous 4X Data Timings (CPU Target) ..... 42
Figure 4-9. Power Up Sequence ..... 46
Figure 4-10. Power Down Sequence ..... 46
Figure 4-11. PROCHOT# Timings ..... 47
Figure 4-12. FERR# Break Event Timing ..... 47
Figure 4-13. THERMTRIP# Assertion to Vcc Turn Off Timing ..... 47
Figure 4-14. FSB Reset and Configuration Timings ..... 49
Figure 4-15. Stop Grant/Sleep/Deep Sleep Timings ..... 50
Figure 4-16. JTAG Waveform ..... 51
Figure 5-1. nanoBGA2 Ballout (Top View) ..... 56
Figure 5-2. nanoBGA2 Dimensions ..... 69

VIA Technologies Inc.
Confidential
NDA Required

# List of Tables

Table 2-1. CPUID Return Values (EAX = 0) ..... 16
Table 2-2. CPUID Feature Flag Values (EAX = 1) ..... 17
Table 2-3. Additional CPUID Feature Flag Values (EAX = 1) ..... 18
Table 2-4. Extended CPUID Functions ..... 18
Table 2-5. Processor Name String ..... 19
Table 2-6. L1 Cache & TLB Configuration Encoding ..... 19
Table 2-7. L2 Cache Configuration Encoding ..... 20
Table 2-8. Centaur Extended CPUID Instruction Functions ..... 20
Table 2-9. Centaur Extended CPUID Feature Flag Values ..... 20
Table 2-10. Centaur Extended CPUID Performance Data ..... 21
Table 2-11. VIA Processor Brand Detection ..... 22
Table 2-12. CR4 Bits ..... 23
Table 3-1. Core Voltage Settings ..... 26
Table 3-2. Ball Descriptions ..... 27
Table 4-1. Recommended Operating Conditions ..... 33
Table 4-2. Maximum Ratings ..... 34
Table 4-3. System Bus BCLK Characteristics ..... 35
Table 4-4. AGTL+ Signal Group DC Characteristics ..... 35
Table 4-5. CMOS DC Characteristics ..... 36
Table 4-6. Open Drain Signal Group DC Characteristics ..... 36
Table 4-7. System Bus Clock AC Specifications (400 MHz) ..... 38
Table 4-8. System Bus Clock AC Specifications (533 MHz) ..... 38
Table 4-9. System Bus Clock AC Specifications (667 MHz) ..... 38
Table 4-10. Common Clock AC Specifications (400 MHz) ..... 40
Table 4-11. Common Clock AC Specifications (533 MHz) ..... 40
Table 4-12. Common Clock AC Specifications (667 MHz) ..... 40
Table 4-13. 400 MHz FSB Source Synchronous AC Specifications ..... 43
Table 4-14. 533 MHz FSB Source Synchronous AC Specifications ..... 44
Table 4-15. 667 MHz FSB Source Synchronous AC Specifications ..... 45
Table 4-16. CMOS Signal and Power Up AC Specifications ..... 48
Table 4-17. FSB Reset Conditions ..... 49
Table 4-18. Stop Grant/Sleep/Deep Sleep AC Specifications ..... 50
Table 4-19. JTAG AC Specifications ..... 51
Table 4-20. VIA C7 Thermal Design Power Information ..... 52
Table 4-21. VIA C7 Thermal Design Power Information ..... 53
Table 4-22. $V_{CCP}$ -I/O Power Consumption ..... 53
Table 5-1. Signal Listing in Order by Signal Name ..... 57
Table 5-2. Signal Listing in Order by Ball Number ..... 63
Table 5-3. Signal Listing in Order by Ball Number ..... 69
Table 7-1. Category 1 MSRs ..... 76
Table 7-2. Category 2 MSRs ..... 77
Table 7-3. Core-to-Bus Frequency Ratio ..... 78
Table 7-4. FCR Bit Assignments ..... 80

VIA Technologies Inc.
Confidential
NDA Required

SECTION

# 1

# INTRODUCTION

VIA Technologies Inc.
Confidential
NDA Required

The VIA C7 processor is based on a unique internal architecture and is manufactured using IBM's advanced 90nm SOI CMOS technology. This architecture and process technology provide a highly compatible, high-performance, and low-power consumption solution for most computing markets.

When considered individually, the compatibility, function, performance, cost, and power dissipation of the VIA C7 processor family are all very competitive. When considered as a whole, the VIA C7 processor family offers a breakthrough level of *value*.

The intent of this datasheet is to make it easy for a direct user—a board designer, a system designer, or a BIOS developer—to use the VIA C7 processor.

Section 1 of the datasheet summarizes the key features of the VIA C7 processor. Section 2 specifies the primary programming interface, Section 3 does the same for the bus interface. Sections 4, 5, and 6 specify the classical datasheet topics of AC timings, ballouts, and mechanical specifications.

Section 7 documents the VIA C7 processor machine specific registers (MSRs).

## 1.1 BASIC FEATURES

With its very low power dissipation, the VIA C7 processor is ideally suited for most applications. All versions share the following common features (except as noted):

- Extremely low power consumption
- PowerSaver provides fastest performance state switching
  - **VIA C7's support only two performance states. Except the VIA C7 1.5 GHz 25W does not support PowerSaver.**
- World's fastest AES encryption using the Advanced Cryptography Engine (ACE)
- Secure Hash Algorithm: SHA-1 and SHA-256
- Montgomery Multiplier

- Random Number Generator
- Thermal Monitor 1, Thermal Monitor 2, and Catastrophic Thermal Protection
- Multi-processor support: Dual processing (SMP).
- MMX, SSE, SSE2, and SSE3-compatible instructions
- Two large (64-KB each, 4-way) Level 1 caches
- 128-KB Level 2 victim cache (32-way)
- L2 Hardware Prefetch
- Two large TLBs (128 entries each, 8-way)
- Branch Target Address Cache with 1k entries each identifying 2 branches
- Unique and sophisticated branch prediction mechanisms
- Bus speeds up to 800 MHz
- Software-compatible with thousands of x86 software applications available
- Very small die-30 $mm^2$ in IBM 90nm SOI technology
- nanoBGA2 package 21mm x 21mm (400 balls)

## 1.2 PROCESSOR VERSIONS

Typically, there are five specification parameters that characterize different versions of a processor family: package, voltage, maximum case temperature, external bus speed, and internal MHz.

The VIA C7 processor family is available in small form factor package, nanoBGA2, just 21mm x 21mm. The minimum and maximum processor core voltages are configured at the factory. After powerup, PowerSaver can dynamically adjust the processor core voltage can select between those pre-configured values.

The internal operating frequency (MHz) of a particular VIA C7 processor is defined by two parameters: the specified external bus speed and the core clock-to-bus ratio. VIA C7 processors operate the bus up to 800 MHz (200 MHz BCLK). The minimum and maximum core clock-to-bus ratios are also configured at the factory. PowerSaver allows the dynamic adjustment of the processor's core clock-to-bus ratio between the two factory configured minimum and maximum ratios.

This datasheet provides the specification for these VIA C7 processors:

- 2.0 GHz
- 1.8 GHz
- 1.6 GHz
- 1.5 GHz
- 1.5 GHz (25W, without PowerSaver)
- 1.3 GHz
- 1.0 GHz

Future versions of the VIA C7 processor may provide other speed grades, bus speed combinations and different core voltages.

More information on these topics is included in Sections 4, 5, and 6 of this datasheet.

VIA Technologies Inc.
Confidential
NDA Required

## 1.3 COMPATIBILITY

VIA C7 processors are the epitome of compatibility. To verify compatibility of the VIA C7 processor with real PC applications and hardware, VIA has performed extensive testing of boards and peripherals, thousands of software applications, and over forty operating systems. Currently, BIOS support for the VIA C7 processor is available from Award, AMI, Phoenix, General Software, and Insyde.

The VIA C7 processor supports SSE, SSE2, and SSE3 instructions for better video, audio, and faster 3D graphics. Other functions are provided and are identified to software with the CPUID instruction. The VIA C7 processor carefully follows the protocol for defining the availability of these optional features. Both the additional and omitted optional features are covered in more detail in Section 2 of this datasheet.

VIA Technologies Inc.
Confidential
NDA Required

This page is intentionally left blank.

VIA Technologies Inc.
Confidential
NDA Required

SECTION

2

# PROGRAMMING INTERFACE

VIA Technologies Inc.
Confidential
NDA Required

## 2.1 GENERAL

The VIA C7 processor's functions include:

- All basic x86 instructions, registers, and functions
- All floating-point (numeric processor) instructions, registers and functions
- All basic operating modes: real mode, protect mode, virtual-8086 mode
- System Management Interrupt (SMI) and the associated System Management Mode (SMM)
- All interrupt and exception functions
- All debug functions (including the new I/O breakpoint function)
- All input/output functions
- All tasking functions (TSS, task switch, etc.)
- Processor initialization behavior
- Page Global Enable feature
- MMX™ instructions
- SSE, SSE2, and SSE3 instructions
- PAT (Page Attribute Table)
- VME (Virtual Mode Enhancements)
- SYSENTER/SYSEXIT functions

However, there are some software differences between the VIA C7 processor and the Intel Pentium-M processor. These differences fall into three groups:

- **Implementation-specific differences**. Examples are cache and TLB testing features, and performance monitoring features that expose the internal implementation features. These types of functions are incompatible among *all* different x86 implementations.
- **Omitted functions**. Some processor functions are not provided on the VIA C7 processor because they are not used or are not needed in the targeted PC systems. Examples are some specific bus functions such as functional redundancy checking and performance monitoring. Other examples are architectural extensions such as support for 36 bit addressing.

  These types of differences are similar to those among various versions of the processors. The CPUID instruction is used by system software to determine whether these features are supported.
- **Low-level behavioral differences**. A few low-level VIA C7 processor functions are different from Intel Pentium-M because the results are (1) documented in the documentation as *undefined*, and (2) known to be different for different x86 implementations. That is, compatibility with the Intel Pentium-M processor for these functions is clearly not needed for software compatibility (or they would not be different across implementations).
- **Additional Functions**. VIA C7 processors provide enhanced features such as cryptography.

VIA Technologies Inc.
Confidential
NDA Required

## 2.2 ADDITIONAL FUNCTIONS

The VIA C7 processor includes a suite of security technologies called Padlock.

### Advanced Cryptography Engine: ACE

Padlock's Advanced Cryptography Engine provides the world's fastest AES encryption implementation. Wherever AES software encryption implementations are used today, it can be optimized for ACE with minimal effort. World class AES performance is a user-level instruction away as only one opcode handles encrypt and decrypt functions. See the Padlock programming guide for further details.

### Random Number Generator: RNG

VIA C7 processors incorporate two random number generators on the processors die for a fast source of entropy. See the Padlock programming guide for further details.

### Secure Hash Algorithm: SHA-1 and SHA-256

VIA C7 processors have a hardware implementation of the secure hash standard algorithm, SHA-1 and SHA-256 (FIPS 180-1). SHA is used to compute a condensed representation of text, useful in many cryptography applications. See the Padlock programming guide for further details.

### Montgomery Multiplier

VIA C7 processors include a Montgomery Multiplier for fast modular exponentiation. Modular exponentiation is commonly used in public key cryptography. See the Padlock programming guide for further details.

### NoExecute: NX

The VIA C7 processor provides data execution protection support used in Microsoft Windows XP SP2.

### Multi-processor:

The VIA C7 processor provides dual processing (SMP) support. Multi-processing requires specific chip-set support.

VIA Technologies Inc.
Confidential
NDA Required

## 2.3 MACHINE-SPECIFIC FUNCTIONS

### 2.3.1 GENERAL

All x86 processor implementations provide a variety of *machine-specific functions*. Examples are cache and TLB testing features and performance monitoring features that expose the internal implementation features.

This section describes the VIA C7 processor machine-specific functions that are most likely used by software, and compares them to related processors where applicable. Section 7 describes these machine-specific registers (*MSRs*).

This section covers those features of x86 processors that are used to commonly identify and control processor features. All x86 processors have the same mechanisms, but the bit-specific data values often differ.

### 2.3.2 STANDARD CPUID INSTRUCTION FUNCTIONS

The CPUID instruction is available on all contemporary x86 processors. The CPUID instruction has two standard functions requested via the EAX register. The first function returns a vendor identification string in registers EBX, ECX, and EDX. The second CPUID function returns an assortment of bits in EAX and EDX that identify the chip version and describe the specific features available. See the following table.

**Table 2-1. CPUID Return Values (EAX = 0)**

| EAX | TITLE | OUTPUT |
|---|---|---|
| 0 | Largest Function Input Value | EAX=1<br>EBX:EDX:ECX =”CentaurHauls” |
| 1 | Processor Signature and Feature Flags | EAX[3:0]=Stepping ID<br>EAX[7:4]=Model ID<br>EAX[11:8]=Family ID<br>EAX[13:12]=Type ID<br>EBX=Reserved<br>ECX=Additional Feature Flags (see Table 2-3)<br>EDX=Feature Flags (see Table 2-2) |

VIA Technologies Inc.
Confidential
NDA Required

The specific feature flag details in EDX when EAX == 1 are listed in Table 2-2. Additional feature flag details in ECX are listed in

## Table 2-2. CPUID Feature Flag Values (EAX = 1)

| EDX bit | Name | Function | C7 | Notes |
|---|---|---|---|---|
| 0 | FPU | The processor provides an on-die x87 floating-point unit. | 1 | |
| 1 | VME | Virtual Mode Extensions are available. | 1 | |
| 2 | DE | Debugging Extensions are available. | 1 | |
| 3 | PSE | The processor supports 4 MB pages. | 1 | |
| 4 | TSC | Time Stamp Counter available. | 1 | |
| 5 | MSR | Machine Specific Registers are available. | 1 | |
| 6 | PAE | Physical Address Extensions | 1 | |
| 7 | Reserved | Not supported. | 0 | |
| 8 | CX8 | CMPXCHG8B instruction available. | 1 | 1 |
| 9 | APIC | Processor contains internal APIC. | 1 | |
| 10 | Reserved | Not supported. | 0 | |
| 11 | SEP | Fast system calls are available using SYSENTER/SYSEXIT instructions. | 1 | |
| 12 | MTRR | Memory Type Range Registers are available. | 1 | |
| 13 | PGE | Global paging is available. | 1 | |
| 14 | Reserved | Not supported. | 0 | |
| 15 | CMOV | CMOV and FCMOV instructions available. | 1 | |
| 16 | PAT | Page Attribute Table available. | 1 | |
| 17 | Reserved | Not Supported. | 0 | |
| 18 | Reserved | Not Supported. | 0 | |
| 19 | CLFSH | CLFLUSH instruction supported. | 1 | |
| 20 | Reserved | Not Supported. | 0 | |
| 21 | Reserved | Not Supported. | 0 | |
| 22 | ACPI | Thermal Monitor and other thermal controls | 1 | |
| 23 | MMX™ | MMX™ instructions are available. | 1 | |
| 24 | FXSR | Fast Floating-Point Save and Restore instructions available. | 1 | |
| 25 | SSE | SSE instructions are available. | 1 | |
| 26 | SSE2 | SSE2 instructions are available. | 1 | |
| 27 | Reserved | Not Supported. | 0 | |
| 28 | Reserved | Not Supported. | 0 | |
| 29 | TM | Thermal monitor is supported | 1 | |
| 30 | Reserved | Not Supported. | 0 | |
| 31 | PBE | Pending-Break Enable is supported | 1 | |

VIA Technologies Inc.
Confidential
NDA Required

### Notes On CPUID Feature Flags:

1. The CMPXCHG8B instruction is provided and always enabled, however, it can be disabled in the corresponding CPUID function bit 8 to avoid a bug in an early version of Windows NT. However, this default can be changed via bit 1 in the FCR MSR.

**Table 2-3. Additional CPUID Feature Flag Values (EAX = 1)**

| ECX bit | Name | Function | C7 |
|---|---|---|---|
| 0 | SSE3 | SSE3 instructions available. | 1 |
| 6:1 | Reserved | Not supported. | 0 |
| 7 | EPS | PowerSaver / Enhanced Power-Saver available. | 1 |
| 8 | TM2 | Thermal Monitor 2 available. | 1 |
| 31:9 | Reserved | Not supported. | 0 |

## 2.3.3 EXTENDED CPUID INSTRUCTION FUNCTIONS

The VIA C7 processor supports extended CPUID functions. These functions provide additional information about the VIA C7 processor. Extended CPUID functions are requested by executing CPUID with EAX set to any value in the range 0x80000000 through 0x80000006.

The following table summarizes the extended CPUID functions.

**Table 2-4. Extended CPUID Functions**

| EAX | TITLE | OUTPUT |
|---|---|---|
| 80000000 | Largest Extended Function Input Value | EAX=80000006<br>EBX,ECX,<br>EDX[20]= NX support if set |
| 80000001 | Processor Signature and Feature Flags | EAX=Processor Signature<br>EBX,ECX=Reserved<br>EDX=Extended Feature Flags |
| 80000002 | Processor Name String | EAX,EBX,ECX,EDX |
| 80000003 | Processor Name String | EAX,EBX,ECX,EDX |
| 80000004 | Processor Name String | EAX,EBX,ECX,EDX |
| 80000005 | TLB and L1 Cache Information | EAX = Reserved<br>EBX = TLB Information<br>ECX = L1 Data Cache Information<br>EDX = L1 Instruction Cache Information |
| 80000006 | L2 Cache Information | EAX, EBX, EDX = Reserved<br>ECX = L2 Cache Information |

VIA Technologies Inc.
Confidential
NDA Required

### Largest Extended Function Input Value (EAX==0x80000000)

Returns 0x80000006 in EAX, the largest extended function input value.

### Processor Signature and Feature Flags (EAX==0x80000001)

Returns processor version information in EAX and Extended CPUID feature flags in EDX. EDX bit 20 indicates NoExecute support. NoExecute is used in Windows XP SP2 for virus protection.

### Processor Name String (EAX==0x80000002–0x80000004)

Returns the name of the processor, suitable for BIOS to display on the screen (ASCII). The string can be up to 48 characters in length. For the VIA C7, the processor name string indicates the processor core and maximum operating frequency in ASCII. The string " VIA Esther processor XXXX MHz" is returned by extended function EAX = 0x80000002 through EAX=0x80000004 as follows:

**Table 2-5. Processor Name String**

| CPUID call | EAX | EBX | ECX | EDX |
|---|---|---|---|---|
| 0x80000002 | 0x20202020 | 0x20202020 | 0x20202020 | 0x20202020 |
| 0x80000003 | 0x56202020 | 0x45204149 | 0x65687473 | 0x72702072 |
| 0x80000004 | 0x7365636F | 0x20726F73 | 0x30303031 | 0x007A484D |

### L1 Cache Information (EAX == 0x80000005)

Returns information about the implementation of the TLBs and caches:

**Table 2-6. L1 Cache & TLB Configuration Encoding**

| REGISTER | DESCRIPTION | VALUE |
|---|---|---|
| EAX | Reserved | |
| EBX | TLB Information | |
| EBX[31:24] | D-TLB associativity | 8 |
| EBX[23:16] | D-TLB # entries | 128 |
| EBX[15: 8] | I-TLB associativity | 8 |
| EBX[ 7: 0] | I-TLB # entries | 128 |
| ECX | L1 Data Cache Information | |
| ECX[31:24] | Size (Kbytes) | 64 |
| ECX[23:16] | Associativity | 4 |
| ECX[15: 8] | Lines per Tag | 1 |
| ECX[ 7: 0] | Line Size (bytes) | 64 |
| EDX | L1 Instruction Cache Information | |
| EDX[31:24] | Size (Kbytes) | 64 |
| EDX[23:16] | Associativity | 4 |
| EDX[15: 8] | Lines per Tag | 1 |
| EDX[ 7: 0] | Line Size (bytes) | 64 |

VIA Technologies Inc.
Confidential
NDA Required

### L2 Cache Information (EAX == 0x80000006)

Returns information about the implementation of the L2 cache:

**Table 2-7. L2 Cache Configuration Encoding**

| REGISTER | DESCRIPTION | VALUE |
|---|---|---|
| EAX, EBX, EDX | Reserved | |
| ECX | L2 Data Cache Information | |
| ECX[31:16] | Size (Kbytes) | 128 |
| ECX[15:12] | Associativity | 32 |
| ECX[11: 8] | Lines per Tag | 1 |
| ECX[ 7: 0] | Line Size (bytes) | 64 |

### 2.3.4 CENTAUR EXTENDED CPUID INSTRUCTION FUNCTIONS

The VIA C7 processor supports special CPUID functions. These functions provide additional information about the VIA C7 processor. Centaur CPUID functions are requested by executing CPUID with EAX set to 0xC0000000, 0xC0000001, or 0xC0000002.

**Table 2-8. Centaur Extended CPUID Instruction Functions**

| EAX Input | Title | Output |
|---|---|---|
| 0xC0000000 | Largest Centaur Extended Function Input Value | EAX=0xC0000001 |
| 0xC0000001 | Centaur Extended Feature Flags | EDX=Centaur Extended Feature Flags<br>EAX,EBX,ECX=Reserved |
| 0xC0000002 | Centaur CPUID Performance Data | See Table 2-10 |

**Table 2-9. Centaur Extended CPUID Feature Flag Values**

| EDX bit | Centaur CPUID Extended Feature Flags | VIA C7 |
|---|---|---|
| 0 | Reserved | 0 |
| 1 | Reserved | 0 |
| 2 | Random Number Generator (RNG) Present | 1 |
| 3 | Random Number Generator (RNG) Enabled | 1 |
| 4 | Reserved | 0 |
| 5 | Reserved | 0 |
| 6 | Advanced Cryptography Engine (ACE) Present[1] | 1 |
| 7 | Advanced Cryptography Engine (ACE) Enabled | 1 |
| 8 | ACE2 present[1] | 1 |
| 9 | ACE2 enabled | 1 |
| 10 | Padlock Hash Engine present[1] | 1 |
| 11 | Padlock Hash Engine enabled | 1 |
| 12 | Padlock Montgomery Multiplier present[1] | 1 |
| 13 | Padlock Montgomery Multiplier enabled | 1 |

VIA Technologies Inc.
Confidential
NDA Required

**Table 2-10. Centaur Extended CPUID Performance Data**

| Reg | Bit | Description | Default |
|---|---|---|---|
| EAX | | **Current Temperature in Celsius** | |
| | 7:0 | Fractional temp | 0/1 |
| | 31:8 | Current Temperature in Celsius | 0/1 |
| EBX | | **Mirror of Misc_Performance_Status MSR 0x198[31:0]** | |
| | 7:0 | Current Voltage (16*[7:0] + 700)mV | 0/1 |
| | 15:8 | Current clock multiplier in hexadecimal. e.g. 6X is 00110b.<br>16X is 10000b | 0/1 |
| | 23:16 | Reserved | 0/1 |
| | 31:24 | Lowest clock ratio | 0/1 |
| ECX | | **Mirror of Misc_Performance_Status MSR 0x198[63:32]** | |
| | 7:0 | Highest Voltage encoding (16*[7:0] + 700)mV | 0/1 |
| | 15:8 | Highest clock ratio | 0/1 |
| | 23:16 | Lowest Voltage encoding | 0/1 |
| | 31:24 | Lowest clock ratio | 0/1 |
| EDX | | **Mirror of EBL_CR_POWERON MSR 0x2A** | |
| | 14 | 1 MB Reset Vector<br>0: 0xFFFFFFF<br>1: 0x000FFFF0 | 0 |
| | 17:16 | APIC Cluster ID | 0 |
| | 19:18 | Input Front Side Bus clock<br>00: 100 MHz<br>01: 133 MHz<br>10: 200 MHz<br>11: 166 MHz | 0 |
| | 21:20 | APIC Agent ID | 0 |
| | 26:22 | Current clock ratio in hexadecimal. e.g. 6X is 00110b.<br>16X is 10000b | 0/1 |
| | 31:27 | Reserved | 0/1 |

VIA Technologies Inc.
Confidential
NDA Required

### 2.3.5 PROCESSOR IDENTIFICATION

The VIA C7 processor provides several machine-specific features. These features are identified by the standard CPUID function EAX=1. Other machine-specific features are controlled by MSRs. Some of these features are not backward-compatible with the predecessors in the VIA processor family.

System software must not assume that all future processors in the VIA processor family will implement all of the same machine-specific features, or even that these features will be implemented in a backward-compatible manner. In order to determine if the processor supports particular machine-specific features, system software should follow the following procedure.

Identify the processor as a member of the VIA processor family by checking for a Vendor Identification String of "CentaurHauls" using CPUID with EAX=0. Once this has been verified, system software must determine the processor version in order to properly configure the machine-specific registers.

The CPUID family 6 model A core of the VIA C7 is shared with other VIA processors. To identify these brand variants, use the MSR instruction to read register 1153h and use the Exclusive OR (XOR) function between bit fields 21:20 and 19:18.

**Table 2-11. VIA Processor Brand Detection**

| VIA BRAND | MSR 1153h [21:20] XOR MSR 1153h [19:18] |
|---|---|
| Reserved | 11b |
| VIA C7-M | 00b |
| VIA C7 | 01b |
| VIA Eden | 10b |

NOTE: Valid only for CPUID Family 6 Model A.

In general system software can determine the processor version by comparing the Family and Model Identification fields returned by the CPUID standard, extended, or Centaur extended functions.

If the processor version is not recognized then system software must not attempt to activate any machine-specific feature.

### 2.3.6 EDX VALUE AFTER RESET.

After reset the EDX register holds a component identification number as follows:

| EDX[31:4] | EDX[13:12] | EDX[11:8] | EDX[7:4] | EDX[3:0] |
|---|---|---|---|---|
| Reserved | Type ID | Family ID | Model ID | Stepping ID |

The specific values for the VIA C7 processor are listed here:

| PROCESSOR | TYPE ID | FAMILY ID | MODEL ID | STEPPING ID |
|---|---|---|---|---|
| VIA C7 | 0 | 6 | 10 | Begins at 9 |

### 2.3.7 CONTROL REGISTER 4 (CR4)

Control register 4 (CR4) controls some of the advanced features of x86 processors. The VIA C7 processor provides a CR4 with the following specifics:

VIA Technologies Inc.
Confidential
NDA Required

**Table 2-12. CR4 Bits**

| CR4 BITS - MEANING | VIA C7 | PENTIUM-M | NOTES |
|---|---|---|---|
| 0: VME: Enables VME feature | 0/1 | 0/1 | |
| 1: PVI: Enables PVI feature | 0/1 | 0/1 | |
| 2: TSD: Makes RDTSC inst privileged | 0/1 | 0/1 | |
| 3: DE: Enables I/O breakpoints | 0/1 | 0/1 | |
| 4: PSE: Enables 4-MB pages | 0/1 | 0/1 | |
| 5: PAE: Enables address extensions | r | r | |
| 6: MCE: Enables machine check exception | 0/1 | 0/1 | 1 |
| 7: PGE: Enables global page feature | 0/1 | 0/1 | |
| 8: PCE: Enables RDPMC for all levels | 0/1 | 0/1 | |
| 9: OSFXSR: Enables FXSAVE//FXRSTOR Support | 0/1 | r | |
| 10: OSXMMEXCPT: O/S Unmasked Exception Support | 0/1 | r | |
| 31:11 – reserved | r | r | |

### Notes On CR4

General: a "0/1" means that the default setting of this bit is 0 but the bit can be set to (1). A "0" means that the bit is always 0; it cannot be set. An "r" means that this bit is reserved. It appears as a 0 when read, and a GP exception is signaled if an attempt is made to write a 1 to this bit.

1. The VIA C7 processor Machine Check has different specifics than the Machine Check function of other x86 processors.

### 2.3.8 MACHINE-SPECIFIC REGISTERS

The VIA C7 processor implements the concept of Machine Specific Registers (MSRs). RDMSR and WRMSR instructions are provided and the CPUID instruction identifies that the processor supports MSRs.

In general, the MSRs have no usefulness to application or operating system software and are not used. (This is to be expected since the MSRs are different on each processor.) Section 7 contains a detailed description of the VIA C7 processor's MSRs.

VIA Technologies Inc.
Confidential
NDA Required

## 2.4 OMITTED FUNCTIONS

This section summarizes those functions that are not in the VIA C7 processor. A bit in the CPUID feature flags indicates whether these feature are present or not.

### Page Size Extensions: PSE-36

This function is omitted since the target operating systems for the VIA C7 do not require greater than 4 GB of system memory.

### Other Functions

Model specific registers pertaining to Machine Check, and Debug, Performance Monitoring, and Trace features are not supported.

This page is intentionally left blank.

VIA Technologies Inc.
Confidential
NDA Required

SECTION

3

# HARDWARE INTERFACE

VIA Technologies Inc.
Confidential
NDA Required

## 3.1 BUS INTERFACE

The majority of the balls within the bus interface are involved with the physical memory and I/O interface. The remaining balls are power and ground balls, test and debug support balls, and various ancillary control functions. The balls and associated functions are listed and described in this section.

### Core-to-Bus Frequency Ratio Control

The VIA C7 processor supports both fixed and software control of the core-to-bus frequency ratio. At reset, the processor boots to the factory configured minimum ratio. System BIOS uses PowerSaver to set the operating frequency to the highest supported ratio. System software adjusts the operating frequency using PowerSaver performance states for the desired balance of power consumption and performance.

### Bus Frequency Selection

The VIA C7 processor bus frequency is provided by the motherboard through motherboard strapping options. The VIA C7 processor is designed to operate at bus clock frequencies of 100, 133,166, or 200 MHz.

### 3.1.1 CLARIFICATIONS

#### Power Supply Voltage

The voltage provided to the processor core is accomplished through the processors VID balls.

The VIA C7 processor expects a voltage mapping corresponding to a VRM using the voltage range indicated in Table 3-1.

**Table 3-1. Core Voltage Settings**

| VID[5:0] | $V_{CC}$ | VID[5:0] | $V_{CC}$ | VID[5:0] | $V_{CC}$ | VID[5:0] | $V_{CC}$ |
|---|---|---|---|---|---|---|---|
| 000000 | **1.708** | 010000 | **1.452** | 100000 | **1.196** | 110000 | **0.940** |
| 000001 | **1.692** | 010001 | **1.436** | 100001 | **1.180** | 110001 | **0.924** |
| 000010 | **1.676** | 010010 | **1.420** | 100010 | **1.164** | 110010 | **0.908** |
| 000011 | **1.660** | 010011 | **1.404** | 100011 | **1.148** | 110011 | **0.892** |
| 000100 | **1.644** | 010100 | **1.388** | 100100 | **1.132** | 110100 | **0.876** |
| 000101 | **1.628** | 010101 | **1.372** | 100101 | **1.116** | 110101 | **0.860** |
| 000110 | **1.612** | 010110 | **1.356** | 100110 | **1.100** | 110110 | **0.844** |
| 000111 | **1.596** | 010111 | **1.340** | 100111 | **1.084** | 110111 | **0.828** |
| 001000 | **1.580** | 011000 | **1.324** | 101000 | **1.068** | 111000 | **0.812** |
| 001001 | **1.564** | 011001 | **1.308** | 101001 | **1.052** | 111001 | **0.796** |
| 001010 | **1.548** | 011010 | **1.292** | 101010 | **1.036** | 111010 | **0.780** |
| 001011 | **1.532** | 011011 | **1.276** | 101011 | **1.020** | 111011 | **0.764** |
| 001100 | **1.516** | 011100 | **1.260** | 101100 | **1.004** | 111100 | **0.748** |
| 001101 | **1.500** | 011101 | **1.244** | 101101 | **0.988** | 111101 | **0.732** |
| 001110 | **1.484** | 011110 | **1.228** | 101110 | **0.972** | 111110 | **0.716** |
| 001111 | **1.468** | 011111 | **1.212** | 101111 | **0.956** | 111111 | **0.700** |

### RESET#

The VIA C7 processor is reset by the assertion of the RESET# ball.

### Thermal Diode

An on-die thermal diode supports thermal monitoring via the THERMDN and THERMDP balls.

### Thermal Monitor

The VIA C7 processor provides a second on-die thermal sensor for advanced thermal control. See Section 6.6.

### Advanced Peripheral Interrupt Controller (APIC)

APIC is supported by the VIA C7 processor.

## 3.1.2 OMISSIONS

### Breakpoint and Performance Monitoring Signals

The VIA C7 processor internally supports instruction and data breakpoints. However, the processor does not support the external indication of breakpoint matches. Similarly, the VIA C7 processor contains performance monitoring hooks internally, but it does not support the indication of performance monitoring events.

### Error Checking

The VIA C7 processor does not support error checking. There are no BERR#, BINIT#, AERR#, AP#[1:0], DEP#[7:0], IERR#, RP#, and RSP# balls.

VIA Technologies Inc
Confidential
NDA Required

## 3.2 BALL DESCRIPTION

### Table 3-2. Ball Descriptions

| Ball Name | Description | I/O |
|---|---|---|
| A[18:3]#<br>A30# | The VIA C7 has 36 address signals multiplexed on a 20-bit source-synchronous bus. The address phase is composed of 4 phases within a single BCLK. | I/O |
| A20M# | A20 Mask causes the CPU to make (force to 0) the A20 address bit when driving the external address bus or performing an internal cache access. A20M# is provided to emulate the 1 MByte address wrap-around that occurs on the 8086. Snoop addressing is not affected. | I |
| ADS# | Address Strobe begins a memory/I/O cycle and indicates the address bus and transaction request signals are valid. | I/O |
| ADSTBN0#<br>ADSTBP0# | Address Strobes for A[30,18:3]# and REQ[2:0]#<br><br>ADSTBN0 are negative-edge going data strobes used to latch A[30]#,A[18:3]# on odd data beat transfers.<br><br>ADSTBP0]# are negative-edge going data strobes used to latch A[30]# & A[18:3]# on even data beat transfers.<br><br>External termination is unnecessary. | I/O |
| BCLK0<br>BCLK1 | Bus Clock provides the fundamental timing for the VIA C7 CPU. The frequency of the VIA C7 CPU input clock determines the operating frequency of the CPU's bus. External timing is referenced to the crossing point of the rising edge of BCLK0 and the falling edge of BCLK1 | I |
| BEVO[3:0] | BEVO[3:0] are hardware strapping option balls that allow additional functionality and testability. BEV0[3:0] signals are supplemental and not necessary for regular operation.<br><br>To assist VIA in debugging, these are testing status balls that could be brought out to test connector.<br><br>BEVO3 must be connected to ground for normal operation. | I/O |
| BNR# | Block Next Request signals a bus stall by a bus agent unable to accept new transactions. | I/O |
| BPRI# | Priority Agent Bus Request arbitrates for ownership of the system bus. | I |
| BREQ[3:0]# | BREQ[3:0]# signals request access to the system bus.<br><br>In uniprocessor designs , BREQ[3:1]# are considered "No Connects" and BREQ0# requires 220 ohm pullup to Vccp | I/O |
| BSEL[1:0] | Currently unused. Leave unconnected or route to test point. | O |
| CF[8:0] | CF[8:0] should be connected to ground with zero Ohm resistors. These resistors are strapping options that are determined by the platform BOM.<br><br>Routing is not critical | II |
| COMP[0]<br>COMP[2] | The COMP signals require 27.4 Ohm precision termination.<br><br>The COMP resistors need to placed within 200mils of the processor. | I |
| D[63:0]# | Data Bus signals are bi-directional signals which provide the data path between the VIA C7 CPU and external memory and I/O devices. The data bus must assert DRDY# to indicate valid data transfer.<br>These are also 4X signals and are driven 4 times a clock period. The falling edge of DSTBP[3:0]# and DSTBN[3:0]# will latch D[63:0]#. D[63:0]# are divided into signal groups with a corresponding DSTBN#/DSTBP# pair along with a DINV# for polarity. Hence:<br>D[15:0]# are grouped with DSTBN[0], DSTBP[0], and DINV[0]#.<br>D[31:16]# are grouped with DSTBN[1], DSTBP[1], and DINV[1]#.<br>D[47:32]# are grouped with DSTBN[2], DSTBP[2], and DINV[2]#.<br>D[63:48]# are grouped with DSTBN[3], DSTBP[3], and DINV[3]#. | I/O |
| DBSY# | Data Bus Busy is asserted by the data bus driver to indicate data bus is in use. | I/O |

VIA Technologies Inc.
Confidential
NDA Required

| Ball Name | Description | I/O |
|---|---|---|
| DEFER# | Defer is asserted by target agent (e.g., north bridge) and indicates the transaction cannot be guaranteed as an in-order completion. | I |
| DINV[3:0]# | DINV[3:0] reflect the polarity of D[63:0]#. They are active if the data bus values are inverted. The source driving agent will invert the data bus signals if more than half the bits in the data bus signal group change in the next bus cycle.<br>DINV[0]# governs the polarity of D[15:0]#<br>DINV[1]# governs the polarity of D[31:16]#<br>DINV[2]# governs the polarity of D[47:32]#<br>DINV[3]# governs the polarity of D[63:48]# | I/O |
| DP[3:0]# | DP[3:0]# provide parity for the data signals D[63:0]#. Connect these to the north bridge if supported. If parity is not used, then leave unconnected or route to test point. | I |
| DPSLP# | DPSLP#, when asserted in the stop grant or sleep state, will transition the processor into the deep sleep state. The system should then remove BCLK[1:0]# to arrive at the deep sleep state. Reviving the clocks and then deasserting DPSLP# will transition the processor back to the sleep state | I |
| DPWR# | Asserted by the north bridge to indicate that a data return cycle is pending. | I |
| DRDY# | Data Ready is asserted by data driver to indicate that a valid signal is on the data bus. | I/O |
| DSTBN[3:0]# | DSTBN[3:0]# are negative-edge going data strobes used to latch D[63:0]# on odd data beat transfers.<br>DSTBN[0]# latch D[15:0]# and DINV[0]#<br>DSTBN[1]# latch D[31:16]# and DINV[1]#<br>DSTBN[2]# latch D[47:32]# and DINV[2]#<br>DSTBN[3]# latch D[63:48]# and DINV[3]# | I/O |
| DSTBP[3:0]# | DSTBP[3:0]# are negative-edge going data strobes used to latch D[63:0]# on even data beat transfers.<br>DSTBP[0]# latch D[15:0]# and DINV[0]#<br>DSTBP[1]# latch D[31:16]# and DINV[1]#<br>DSTBP[2]# latch D[47:32]# and DINV[2]#<br>DSTBP[3]# latch D[63:48]# and DINV[3]# | I/O |
| FERR# | FPU Error Status indicates an unmasked floating-point error has occurred. FERR# is asserted during execution of the FPU instruction that caused the error. | O |
| HIT# | Snoop Hit indicates that the current cache inquiry address has been found in the cache (exclusive or shared states). | I/O |
| HITM# | Snoop Hit Modified indicates that the current cache inquiry address has been found in the cache and dirty data exists in the cache line (modified state). | I/O |
| IGNNE# | Ignore Numeric Error forces the VIA C7 CPU to ignore any pending unmasked FPU errors and allows continued execution of floating point instructions. | I |
| INIT# | Assertion resets integer registers and does not affect internal cache or floating point registers.<br>INIT# active during RESET# will execute BIST (Built-In Self-Test). | I |
| INTR | Indicates external interrupt. Becomes LINT0 when using the APIC. | I |
| LOCK# | Lock Status is used by the CPU to signal to the target that the operation is atomic. | I/O |
| MPI | MPI controls termination for multi-processor configurations. For uni-processors designs, MPI should tied to ground or pulled to ground with a zero ohm resistor for testability. Placement is not critical | I |
| NMI | Indicates Non-Maskable Interrupt. Becomes LINT1 when using the APIC. | I |
| PROCHOT# | PROCHOT# is an output from the on-die thermal sensor whose assertion indicates the processor has reached its maximum operating temperature. When PROCHOT# is active, the processor will activate its thermal protection circuitry. | O |
| PSI# | PSI# is asserted when the processor enters the deep sleep state. This is a signal to the system VRM to transition to the deeper sleep state. | O |
| PWRGD | Indicates that the processor's VCC is stable. Care should be taken to ensure this signal has no glitches or noise. | I |
| REQ[2:0]# | Request Command is asserted by bus driver to define current transaction type.<br>REQ[2:0] are part of the address group. | I/O |
| RESET# | Resets the processor and invalidates internal cache without writing back. | I |
| RS[2:0]# | Response Status signals the completion status of the current transaction when the CPU is the response agent. | I |
| RSVD | Reserved for future use. | - |
| SLP# | Sleep, when asserted in the stop grant state, causes the CPU to enter the sleep state. | I |

VIA Technologies Inc.
Confidential
NDA Required

| Ball Name | Description | I/O |
|---|---|---|
| SMI# | System Management (SMM) Interrupt forces the processor to save the CPU state to the top of SMM memory and to begin execution of the SMI services routine at the beginning of the defined SMM memory space. An SMI is a high-priority interrupt than NMI. | I |
| STPCLK# | Stop Clock causes the CPU to enter the stop grant state. | I |
| TCK | Clock Input for the JTAG port. | I |
| TDI | Data Input for the JTAG port. | I |
| TDO | Data Output for the JTAG port. | O |
| THERMDN<br>THERMDP | The anode/cathode pair of an on-chip thermal diode for measuring the processor core temperature. | O |
| THERMTRIP# | THERMTRIP# is asserted when the processor exceeds the absolute maximum die temperature. When asserted, the processor will transition to the lowest performance state and cease execution. System platform can use THERMTRIP# to power down the entire system for catastrophic thermal protection. | O |
| TMS | Test Mode Select for the JTAG port | I |
| TRDY# | Target Ready indicates that the target is ready to receive a write or write-back transfer from the CPU. | I |
| TRST# | Test Reset for the JTAG port. | I |
| $V_{CC}$ | Core voltage power supply. | I |
| $V_{CCA}$[2:0] | Isolated power supply for the internal PLL's.<br>VCCA0 provides power to the on-die thermal monitor. | I |
| $V_{CCP}$ | Processor bus termination voltage power supply. | I |
| $V_{CC_SENSE}$ | Isolated low impedance trace to processor core power for use in power measurement or VRM feedback. | O |
| VID[5:0] | The Voltage Identification signals indicate the core voltage required from the platform VRM. | O |
| $V_{SS}$ | Ground power supply. | - |
| $V_{SS_SENSE}$ | Isolated low impedance ground trace to processor core for use in power measurement or VRM feedback. | O |

VIA Technologies Inc.
Confidential
NDA Required

## 3.3 POWER MANAGEMENT

The VIA C7 processor provides both static and dynamic power management.

The VIA C7 processor supports five power management states: NORMAL, QUICKSTART, SLEEP, DEEP SLEEP, and DEEPER SLEEP state.

The VIA C7 processor uses dynamic power management techniques to reduce power consumption in the NORMAL state. In NORMAL state, the on-chip arrays, selected datapaths, and the associated control logic are powered down when not in use. Also, units that are in use attempt to minimize switching of inactive nodes.

- NORMAL state is the normal operating state for the processor.
- QUICKSTART state is the low power state where most of the processor clocks do not toggle. It is entered when the STPCLK# signal is asserted or when the processor executes the HALT instruction. Snoop cycles are supported in this state.
- SLEEP state is the low power state where only the processor's PLL (phase lock loop) toggles. It is entered from STOP GRANT state when the processor samples the SLP# signal asserted. Snoop cycles that occur while in SLEEP state or during a transition into or out of SLEEP state will cause unpredictable behavior.
- DEEP SLEEP state is a very low power state. It is entered when the BCLK signal is stopped while the processor is in the SLEEP state. Snoop cycles are completely ignored in this state. The processor will drive PSI# upon the entry of the Deep Sleep.
- DEEPER SLEEP state is the lowest power state. It is entered when the processor core voltage is lowered while the processor is in the DEEP SLEEP state. Snoop cycles are completely ignored in this state.

**Figure 3-1. Power Management State Diagram**

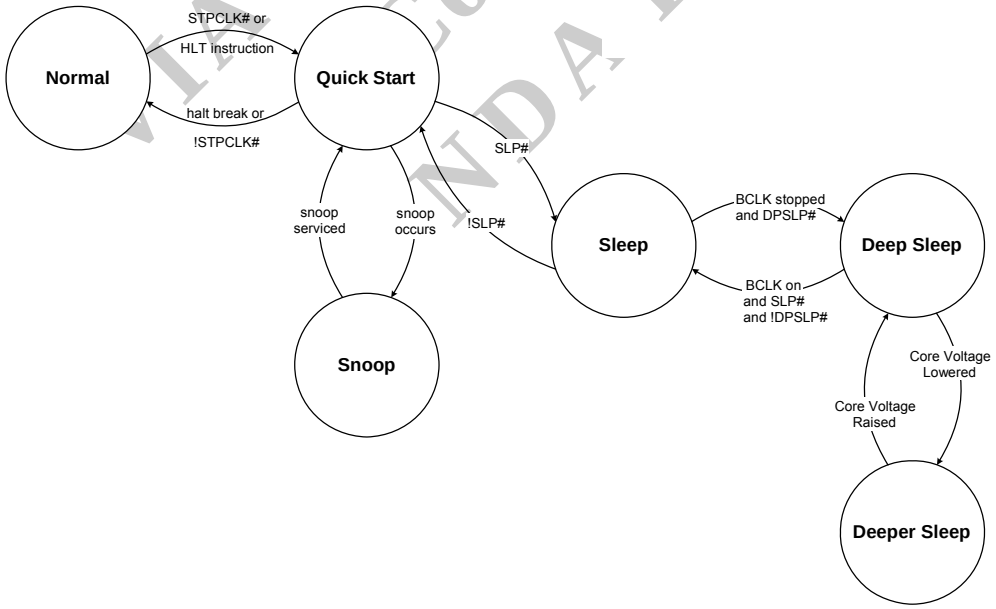


VIA Technologies Inc.
Confidential
NDA Required

## 3.4 POWERSAVER

PowerSaver is a highly advanced power management mechanism for the VIA C7 processor. PowerSaver technology allows the dynamic adjustment of the operating frequency and operating voltage. The VIA C7 can only change from the highest supported performance state to the lowest supported performance state: intermediate performance states are not guaranteed to work and are not officially supported. System software can use PowerSaver to request the sufficient amount of performance. Each individual performance state (P-State) is described in the system bios according to 8.4.4 of the ACPI 3.0 specification.

The VIA C7 processor incorporates two on-chip core clock PLL's. This allows the processor to ping-pong between two frequencies instantaneously. In the simplest scenario, where there are only two clock frequencies of interest and no voltage changes, the transition can be instantaneous with no latency. In more complex scenarios, where there are multiple clock frequencies of interest, the "old" frequency can continue to be used while the new frequency is ramped up. The transition is still instantaneous from a software point of view (code still executes), but there is a latency associated with switching to the ramping "new" frequency.

VIA C7 allows for a clean hardware approach to processor operating point transitions. The transitions are performed instantaneously from a software and functional point of view. Snoops and interrupts, for example, are unaffected by transitions.

See the BIOS Writer's guide for further details.

## 3.5 JTAG

The VIA C7 processor has a JTAG scan interface that is used for test functions. Boundary scan is available through the JTAG interface.

VIA Technologies Inc.
Confidential
NDA Required

SECTION

4

# ELECTRICAL SPECIFICATIONS

VIA Technologies Inc.
Confidential
NDA Required

## 4.1 DC SPECIFICATIONS

### 4.1.1 RECOMMENDED OPERATING CONDITIONS

Functional operation of the VIA C7 processor is guaranteed if the conditions in Table 4-1 are met. Sustained operation outside of the recommended operating conditions may damage the device.

**Table 4-1. Recommended Operating Conditions**

| PARAMETER | MIN | NOM | MAX | UNITS | NOTES |
|---|---|---|---|---|---|
| Operating Junction Temperature | 0 | | 100 | °C | |
| $V_{CC}$ Voltage | | 1.148<br>1.084<br>1.004<br>0.956 | 1.148 | V | 2 |
| $V_{CC}$ Static Tolerance | Use LoadLine figure below | | | V | 1 |
| $V_{CC}$ Dynamic Tolerance | | | | V | |
| $V_{CC,BOOT}$ Boot Voltage | | 1.200 | | V | 2 |
| $V_{CCP}$ Termination Voltage | 0.997 | 1.05 | 1.102 | V | |
| $V_{CCDPRSLP}$ Deeper Sleep Voltage | | 0.748 | | V | |
| $I_{CC}$ | | 15 | 25 | A | |
| $I_{DPRSLP}$ Deeper Sleep Current | | | 0.66 | A | |
| $V_{CCA}$ PLL supply voltage | -5% | 1.8 or 1.5 | +5% | V | |

| PARAMETER | MIN | NOM | MAX | UNITS | NOTES |
|---|---|---|---|---|---|
| $I_{CCA}$ PLL supply current | | 10 | 130 | mA | 3 |

**Notes:**

1. DC measurement. Regulator Circuit should support current draw up to 25A.
2. Vcc 1.148V is maximum sustained voltage. Vcc_boot is a temporary power-up voltage for initialization.
3. Measured at 1.8V Vccp.

**Figure 4-1.Vcc Loadline**

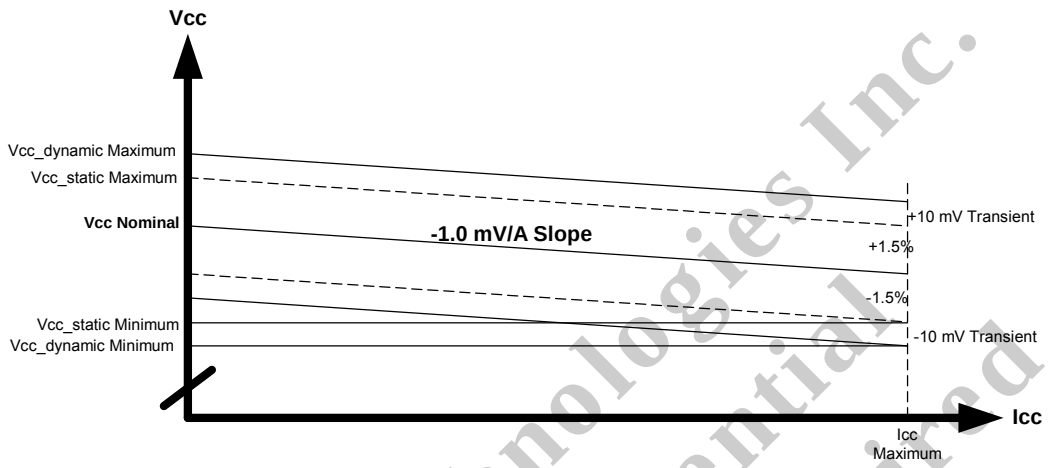


VIA Technologies Inc.
Confidential
NDA Required

## 4.1.2 MAXIMUM RATINGS

While functional operation is not guaranteed beyond the operating ranges listed in Table 4-1, the device may be subjected to the limits specified in Table 4-2 without causing long-term damage.

These conditions must not be imposed on the device for a sustained period—any such sustained imposition may damage the device. Likewise exposure to conditions in excess of the maximum ratings may damage the device.

**Table 4-2. Maximum Ratings**

| PARAMETER | MIN | MAX | UNITS | NOTES |
|---|---|---|---|---|
| Storage Temperature | -40 | 150 | °C | |
| Supply Voltage ($V_{CC}$) | -0.5 | 1.20 | V | |
| I/O Voltage | -0.5 | $V_{CCP}$ +0.5 | V | |

### 4.1.3 DC CHARACTERISTICS

**Table 4-3. System Bus BCLK Characteristics**

| PARAMETER | MIN | TYP | MAX | UNITS | NOTES |
|---|---|---|---|---|---|
| $V_L$ – Input Low Voltage | | 0 | | V | |
| $V_H$ – Input High Voltage | 0.660 | 0.710 | 0.850 | V | |
| $V_{CROSS}$ – Crossing Voltage | 0.25 | 0.35 | 0.55 | V | |
| $\Delta V_{CROSS}$ – Range of Crossing Voltage | | | 0.140 | V | |
| $V_{TH}$ – Threshold Region | $V_{CROSS}$-0.100 | | $V_{CROSS}$+0.100 | V | |
| $I_{LI}$ – Input Leakage Current | | | ± 15 | µA | |
| $C_{PAD}$– Pad Capacitance | 1.8 | 2.3 | 2.75 | pF | |

**Table 4-4. AGTL+ Signal Group DC Characteristics**

| PARAMETER | MIN | TYP | MAX | UNITS | NOTES |
|---|---|---|---|---|---|
| VCCP – I/O & Termination Voltage | 0.997 | 1.05 | 1.102 | V | |
| GTLREF- Reference Voltage | 2/3 VCCP – 2% | 2/3 VCCP | 2/3 VCCP + 2% | V | 2 |
| $V_{IH}$ – Input High Voltage | GTLREF+0.1 | | VCCP+0.1 | V | |
| $V_{IL}$ – Input Low Voltage | -0.1 | | GTLREF-0.1 | V | |
| $V_{OH}$ – High Level Output Voltage | | VCCP | | | |
| $R_{TT}$ – Termination Resistance | 47 | 55 | 63 | Ω | |
| $R_{ON}$ – Buffer On Resistance | 17.7 | 24.7 | 32.9 | Ω | |
| $I_{LI}$ – Input Leakage Current | | | ± 100 | µA | |
| $C_{PAD}$– Pad Capacitance | 1.8 | 2.3 | 2.75 | pF | |

**Notes:**

1. Leakage current is specified for the range between VSS and VCC. GTL I/O's are diode clamped to the VCC and VSS rails.
2. GTLREF is internally generated for VIA C7.

VIA Technologies Inc.
Confidential
NDA Required

### Table 4-5. CMOS DC Characteristics

| PARAMETER | MIN | TYP | MAX | UNITS | NOTES |
|---|---|---|---|---|---|
| VCCP – I/O & Termination Voltage | 0.997 | 1.05 | 1.102 | V | |
| $V_{IL}$ -- Input Low Voltage CMOS | -0.1 | | 0.3*VCCP | V | |
| $V_{IH}$ – Input High Voltage | 0.7*VCCP | | VCCP+0.1 | V | |
| $V_{OL}$ – Low Level Output Voltage | -0.1 | 0 | 0.1*VCCP | V | |
| $V_{OH}$ – High Level Output Voltage | 0.9*VCCP | VCCP | VCCP+0.1 | V | |
| $I_{LI}$ – Input Leakage Current | | | ±100 | µA | |
| $C_{PAD}$– Pad Capacitance | 1.0 | 2.3 | 3.0 | pF | |

**Notes:**

1. Leakage current is specified for the range between VSS and VCC.
2. I/O's are diode clamped to the VCCP and VSS rails.

### Table 4-6. Open Drain Signal Group DC Characteristics

| PARAMETER | MIN | TYP | MAX | UNITS | NOTES |
|---|---|---|---|---|---|
| $V_{PULL}$ – Maximum Pullup Voltage | | VCCP | | V | |
| $V_{OL}$ – Low Level Output Voltage | 0 | 0 | 0.20 | V | |
| $I_{OL}$ – Low Level Output Current | | | 12 | mA | |
| $I_{LI}$ – Input Leakage Current | | | ±100 | µA | |
| $C_{PAD}$– Pad Capacitance | 1.7 | 2.3 | 3.0 | pF | |

VIA Technologies Inc.
Confidential
NDA Required

## 4.2 AC TIMING TABLES AND WAVEFORMS

**Figure 4-2. BCLK Generic Clock Timing Waveform**

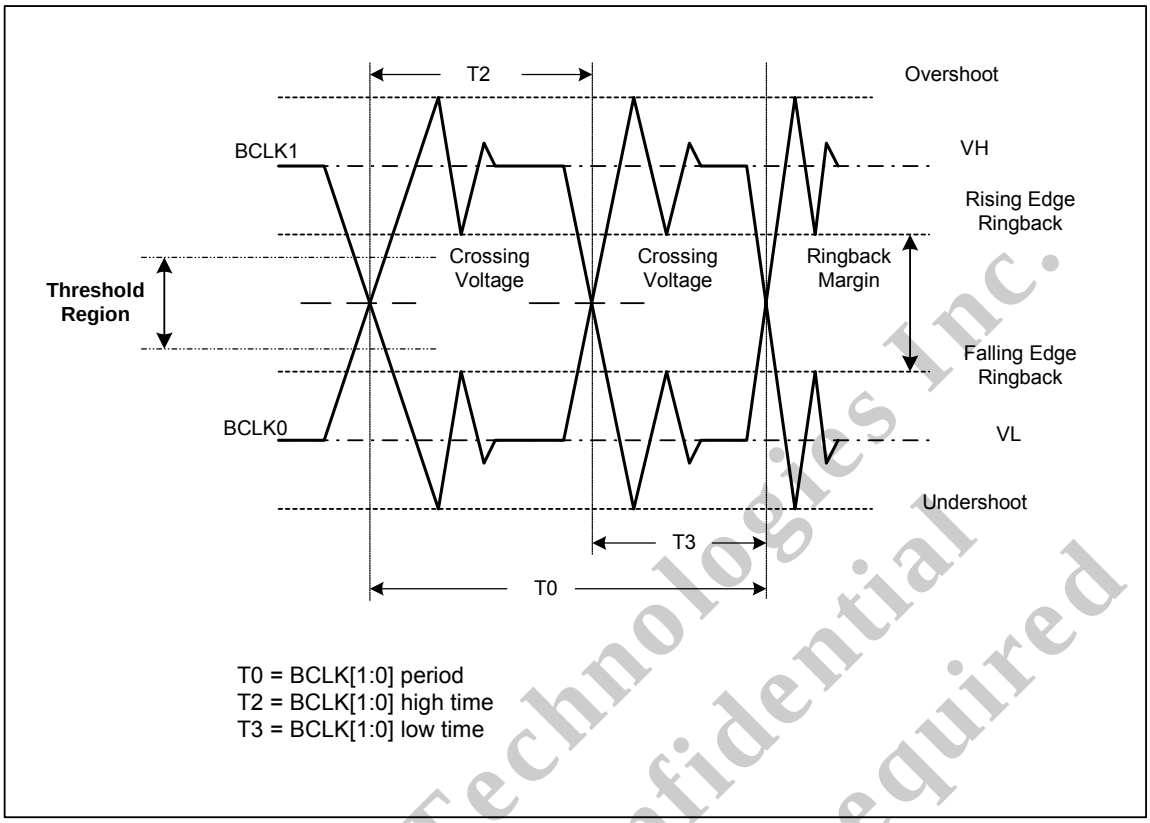


VIA Technologies Inc.
Confidential
NDA Required

### Table 4-7. System Bus Clock AC Specifications (400 MHz)

| SYMBOL | PARAMETER | MIN | NOM | MAX | UNIT | FIGURE | NOTES[1] |
|---|---|---|---|---|---|---|---|
| | System Bus Frequency | 99.47 | 100 | 100.04 | MHz | 2 | |
| T0 | BCLK Period | 10 | | 10.2 | ns | 2 | 1 |
| T1 | BCLK Stability | | | 200 | ps | 2 | 2 |
| T2 | BCLK High Time | 3.94 | 5 | 6.12 | ns | 2 | |
| T3 | BCLK Low Time | 3.94 | 5 | 6.12 | ns | 2 | |
| T4 | BCLK Rise Time | 175 | | 700 | ps | 2 | 3 |
| T5 | BCLK Fall Time | 175 | | 700 | ps | 2 | 3 |

### Table 4-8. System Bus Clock AC Specifications (533 MHz)

| SYMBOL | PARAMETER | MIN | NOM | MAX | UNIT | FIGURE | NOTES[1] |
|---|---|---|---|---|---|---|---|
| | System Bus Frequency | 132.62 | 133.33 | 133.37 | MHz | 2 | |
| T0 | BCLK Period | 7.49 | | 7.54 | ns | 2 | 1 |
| T1 | BCLK Stability | | | 175 | ps | 2 | 2 |
| T2 | BCLK High Time | 3.0 | 3.75 | 4.54 | ns | 2 | |
| T3 | BCLK Low Time | 3.94 | 3.75 | 4.54 | ns | 2 | |
| T4 | BCLK Rise Time | 175 | | 700 | ps | 2 | 3 |
| T5 | BCLK Fall Time | 175 | | 700 | ps | 2 | 3 |

### Table 4-9. System Bus Clock AC Specifications (667 MHz)

| SYMBOL | PARAMETER | MIN | NOM | MAX | UNIT | FIGURE | NOTES[1] |
|---|---|---|---|---|---|---|---|
| | System Bus Frequency | 165.78 | 166.66 | 166.72 | MHz | 2 | |
| T0 | BCLK Period | 5.998 | | 6.032 | ns | 2 | 1 |
| T1 | BCLK Stability | | | 175 | ps | 2 | 2 |
| T2 | BCLK High Time | 2.4 | 3.00 | 3.632 | ns | 2 | |
| T3 | BCLK Low Time | 2.4 | 3.00 | 4.632 | ns | 2 | |
| T4 | BCLK Rise Time | 175 | | 700 | ps | 2 | 3 |
| T5 | BCLK Fall Time | 175 | | 700 | ps | 2 | 3 |

VIA Technologies Inc.
Confidential
NDA Required

**Notes:**

1. The period is the average period and may vary as defined by the period stability specification (T1).
2. Period stability is the maximum timing difference between adjacent BCLK periods.
3. Slew rate is measured between the 35% and 65% points of the BCLK swing ($V_L$ to $V_H$)

### Figure 4-3. FSB Common Clock Valid Delay Timings

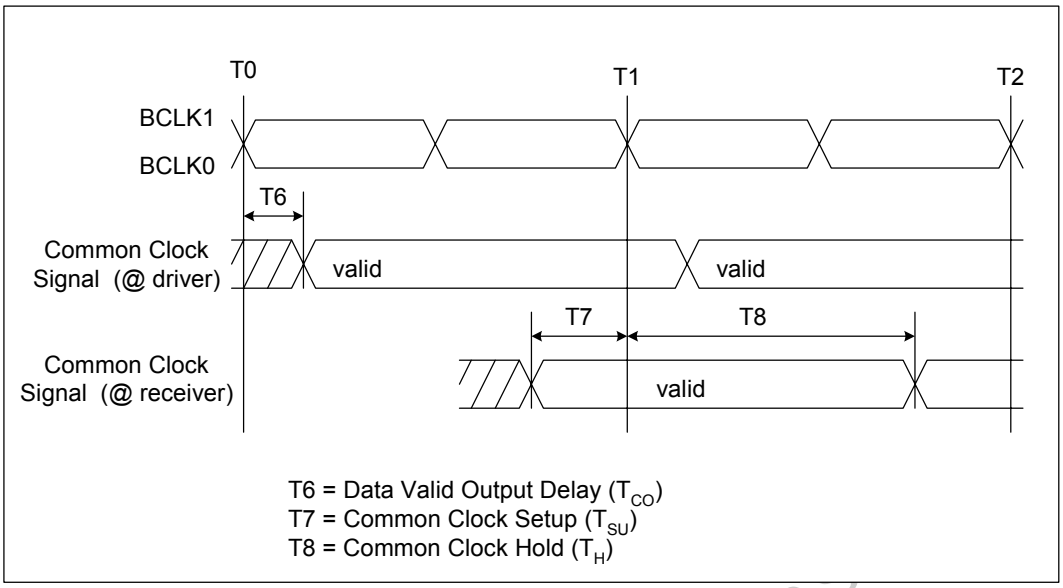


### Figure 4-4. FSB Test Circuit

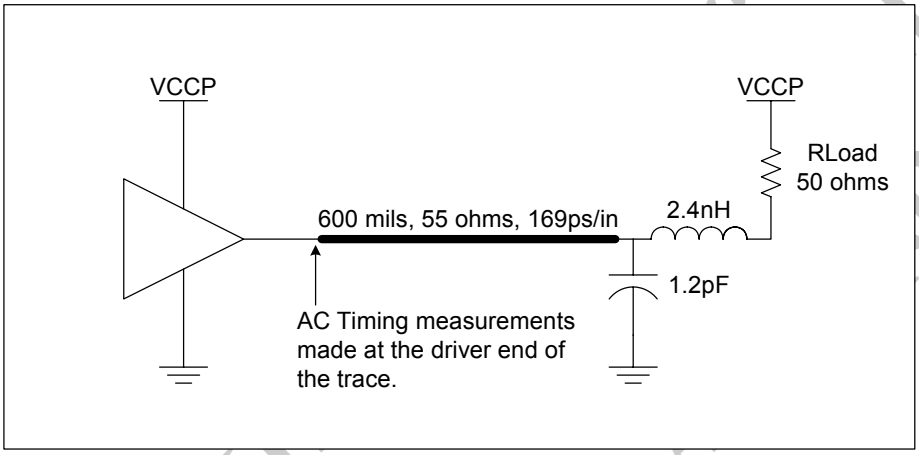

### Table 4-10. Common Clock AC Specifications (400 MHz)

| SYMBOL | PARAMETER | MIN | NOM | MAX | UNIT | FIGURE | NOTES[1,2] |
|---|---|---|---|---|---|---|---|
| T6 | Common Clock Output Valid Delay | 0.15 | | 3.3 | ns | 3 | 3 |
| T7 | Common Clock Input Setup Time | 2.9 | | | ns | 3 | 4 |
| T8 | Common Clock Input Hold Time | 0.4 | | | ns | 3 | 4 |

### Table 4-11. Common Clock AC Specifications (533 MHz)

| SYMBOL | PARAMETER | MIN | NOM | MAX | UNIT | FIGURE | NOTES[1,2] |
|---|---|---|---|---|---|---|---|
| T6 | Common Clock Output Valid Delay | 0.22 | | 2.10 | ns | 3 | 3 |
| T7 | Common Clock Input Setup Time | 2.00 | | | ns | 3 | 4 |
| T8 | Common Clock Input Hold Time | 0.15 | | | ns | 3 | 4 |

### Table 4-12. Common Clock AC Specifications (667 MHz)

| SYMBOL | PARAMETER | MIN | NOM | MAX | UNIT | FIGURE | NOTES[1,2] |
|---|---|---|---|---|---|---|---|
| T6 | Common Clock Output Valid Delay | 0.22 | | 1.50 | ns | 3 | 3 |
| T7 | Common Clock Input Setup Time | 0.90 | | | ns | 3 | 4 |
| T8 | Common Clock Input Hold Time | 0.15 | | | ns | 3 | 4 |

**Notes:**

1. Guaranteed by design and not 100% tested.
2. All common clock AC timing are referenced to the crossing voltage (Vcross) of BCLK[1:0] at the rising edge of BCLK0. All Common clock input signal timings are referenced at 2/3 VCCP at the processor pad.
3. Valid delay timings for these signals are specified into the test circuit described in Figure 4-4 at 2/3 VCCP.
4. Timing measured at 2/3 VCCP assuming a slew rate between 0.3 V/ns to 4.0 V/ns.

VIA Technologies Inc.
Confidential
NDA Required

**Figure 4-5. Source Synchronous 4X Address Timings (CPU Source)**

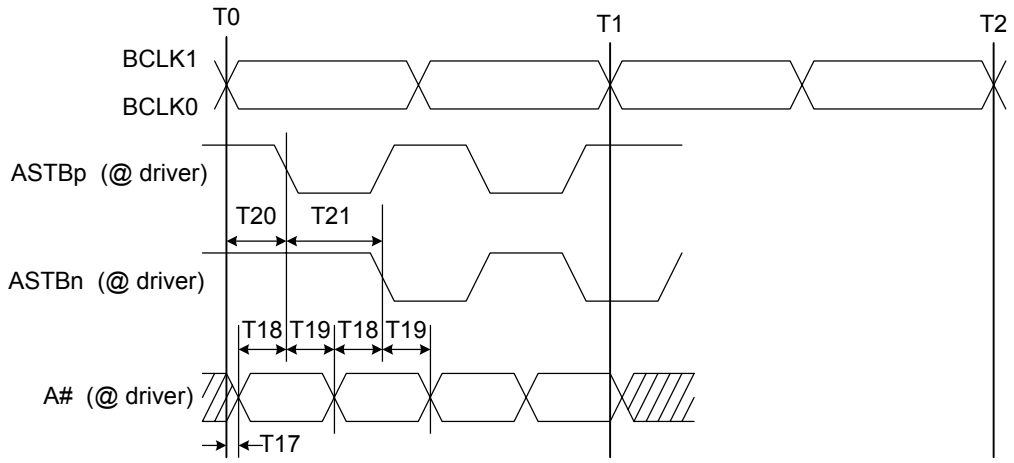


T17 = Address Output Valid Delay
T18 = Address Output Valid Delay Before Address Strobe
T19 = Address Output Valid Delay After Address Strobe
T20 = Address Strobe 'N' (ASTBn) Output Valid Delay
T21 = First Address Strobe to Subsequent Strobe

**Figure 4-6. Source Synchronous 4X Address Timings (CPU Target)**

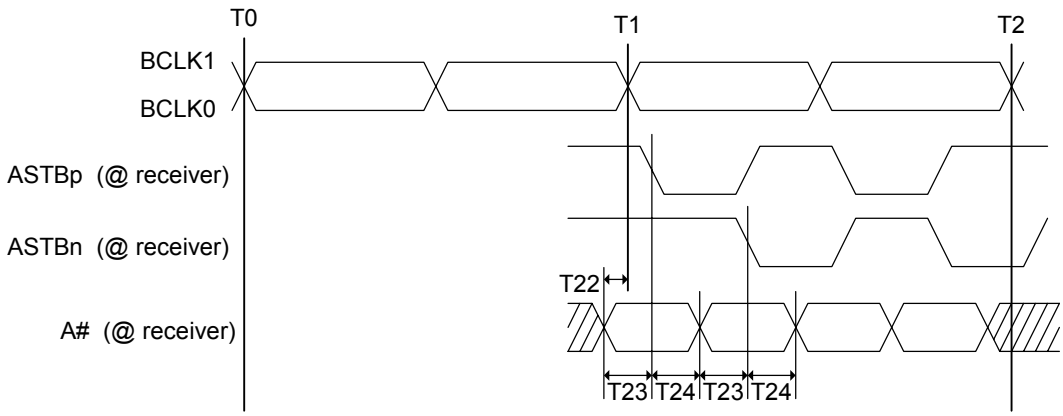


T22 = Setup Time to BCLK
T23 = Input Setup Time
T24 = Input Hold Time

## Figure 4-7. Source Synchronous 4X Data Timings (CPU Source)

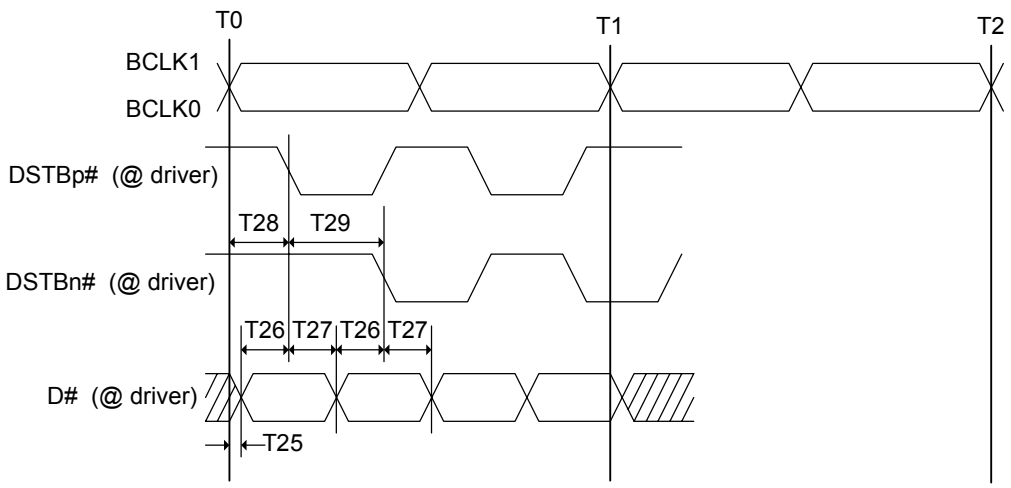


T25 = Data Output Valid Delay
T26 = Data Output Valid Delay Before Data Strobe
T27 = Data Output Valid Delay After Data Strobe
T28 = Data Strobe 'n' (DSTBP#) Output Valid Delay
T29 = First Data Strobe to Subsequent Strobe

## Figure 4-8. Source Synchronous 4X Data Timings (CPU Target)

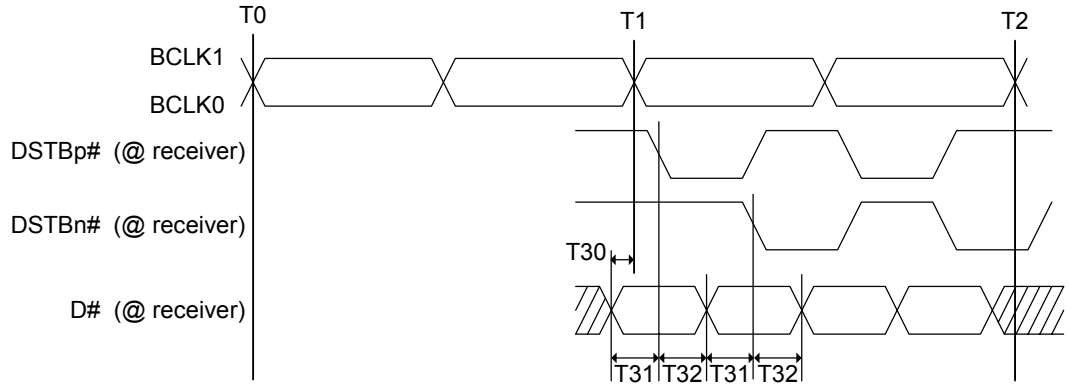


T30 = Setup Time to BCLK
T31 = Input Setup Time
T32 = Input Hold Time

## Table 4-13. 400 MHz FSB Source Synchronous AC Specifications

| SYMBOL | PARAMETER | MIN | NOM | MAX | UNIT | FIGURE | NOTES[1,2] |
|---|---|---|---|---|---|---|---|
| T17 | Address Output Delay (first address only) | 0.0 | | 2.30 | ns | 6 | 3 |
| T18 | Address Output Valid Before Strobe | 0.72 | | | ns | 6 | 3,5 |
| T19 | Address Output Valid After Strobe | 0.72 | | | ns | 6 | 3,5 |
| T20 | Data Strobe 'N' (ASTBP#) Output Valid Delay | 1.25 | | 3.55 | ns | 6 | 8 |
| T21 | First Address Strobe to Subsequent Strobe | | | 2.5 | ns | 6 | |
| T22 | Address Input Setup Time to BCLK | .63 | | | ns | 7 | 7,9 |
| T23 | Address Input Setup Time to Strobe | 0.34 | | | ns | 7 | 4 |
| T24 | Address Input Hold Time to Strobe | 0.34 | | | ns | 7 | 4 |
| T25 | Data Output Delay (first data only) | 0.0 | | 2.30 | ns | 8 | 3 |
| T26 | Data Output Valid Before Strobe | 0.72 | | | ns | 8 | 3,5 |
| T27 | Data Output Valid After Strobe | 0.72 | | | ns | 8 | 3,5 |
| T28 | Data Strobe 'n' (DSTBP#) Output Valid Delay | 1.25 | | 3.55 | ns | 8 | 8 |
| T29 | First Data Strobe to Subsequent Strobe | | | 2.5 | ns | 8 | |
| T30 | Data Input Setup Time to BCLK | .63 | | | ns | 9 | 7,9 |
| T31 | Data Input Setup Time to Strobe | 0.34 | | | ns | 9 | 4 |
| T32 | Data Input Hold Time to Strobe | 0.34 | | | ns | 9 | 4 |

VIA Technologies Inc.
Confidential
NDA Required

## Table 4-14. 533 MHz FSB Source Synchronous AC Specifications

| SYMBOL | PARAMETER | MIN | NOM | MAX | UNIT | FIGURE | NOTES[1,2,3] |
|---|---|---|---|---|---|---|---|
| T17 | Address Output Delay (first address only) | 0.0 | | 1.80 | ns | 6 | 3 |
| T18 | Address Output Valid Before Strobe | 0.59 | | | ns | 6 | 3,5 |
| T19 | Address Output Valid After Strobe | 0.59 | | | ns | 6 | 3,5 |
| T20 | Data Strobe 'N' (ASTBP#) Output Valid Delay | 0.938 | | 2.738 | ns | 6 | 8 |
| T21 | First Address Strobe to Subsequent Strobe | | | 1.875 | ns | 6 | |
| T22 | Address Input Setup Time to BCLK | 0.47 | | | ns | 7 | 7,9 |
| T23 | Address Input Setup Time to Strobe | 0.22 | | | ns | 7 | 4 |
| T24 | Address Input Hold Time to Strobe | 0.22 | | | ns | 7 | 4 |
| T25 | Data Output Delay (first data only) | 0.0 | | 1.80 | ns | 8 | 3 |
| T26 | Data Output Valid Before Strobe | 0.59 | | | ns | 8 | 3,5 |
| T27 | Data Output Valid After Strobe | 0.59 | | | ns | 8 | 3,5 |
| T28 | Data Strobe 'n' (DSTBP#) Output Valid Delay | 0.938 | | 2.738 | ns | 8 | 8 |
| T29 | First Data Strobe to Subsequent Strobe | | | 1.875 | ns | 8 | |
| T30 | Data Input Setup Time to BCLK | 0.47 | | | ns | 9 | 7,9 |
| T31 | Data Input Setup Time to Strobe | 0.22 | | | ns | 9 | 4 |
| T32 | Data Input Hold Time to Strobe | 0.22 | | | ns | 9 | 4 |

VIA Technologies Inc.
Confidential
NDA Required

## Table 4-15. 667 MHz FSB Source Synchronous AC Specifications

| SYMBOL | PARAMETER | MIN | NOM | MAX | UNIT | FIGURE | NOTES[1,2,3] |
|---|---|---|---|---|---|---|---|
| T17 | Address Output Delay (first address only) | 0.0 | | 1.25 | ns | 6 | 3 |
| T18 | Address Output Valid Before Strobe | 0.55 | | | ns | 6 | 3,5 |
| T19 | Address Output Valid After Strobe | 0.55 | | | ns | 6 | 3,5 |
| T20 | Data Strobe 'N' (ASTBP#) Output Valid Delay | 0.75 | | 2.00 | ns | 6 | 8 |
| T21 | First Address Strobe to Subsequent Strobe | | | 1.5 | ns | 6 | |
| T22 | Address Input Setup Time to BCLK | 0.38 | | | ns | 7 | 7,9 |
| T23 | Address Input Setup Time to Strobe | 0.22 | | | ns | 7 | 4 |
| T24 | Address Input Hold Time to Strobe | 0.22 | | | ns | 7 | 4 |
| T25 | Data Output Delay (first data only) | 0.0 | | 1.25 | ns | 8 | 3 |
| T26 | Data Output Valid Before Strobe | 0.55 | | | ns | 8 | 3,5 |
| T27 | Data Output Valid After Strobe | 0.55 | | | ns | 8 | 3,5 |
| T28 | Data Strobe 'n' (DSTBP#) Output Valid Delay | 0.75 | | 2.00 | ns | 8 | 8 |
| T29 | First Data Strobe to Subsequent Strobe | | | 1.5 | ns | 8 | |
| T30 | Data Input Setup Time to BCLK | 0.38 | | | ns | 9 | 7,9 |
| T31 | Data Input Setup Time to Strobe | 0.22 | | | ns | 9 | 4 |
| T32 | Data Input Hold Time to Strobe | 0.22 | | | ns | 9 | 4 |

**Notes:**

1. Guaranteed by design and not 100% tested.
2. All source synchronous AC timings are referenced to their associated strobe at 2/3 VCCP. Source synchronous data signals are referenced to the falling edge of their associated data strobe. Source synchronous address signals are referenced to the rising and falling edge of their associated address strobe. All source synchronous signal timings are referenced to 2/3 VCCP at the processor pad.
3. Valid delay timings for these signals are specified into the test circuit described in Figure 4-4 and at 2/3 VCCP.
4. Timing measured at 2/3 VCCP and assumes a slew rate between 1.0V/ns to 4.0V/ns.
5. The minimum time the data or address will be valid before its strobe.
6. The minimum time the data or address will be valid after its strobe.
7. N, which can be 0,1,2, or 3, refers to the strobe signals in each data group.
8. This specification applies only to DSTBP[3:0]# and is measured to the first falling edge of the strobe.
9. All source synchronous signals must meet the specified setup time to BCLK as well as the setup time to each respective strobe.
10.

VIA Technologies Inc.
Confidential
NDA Required

## Figure 4-9. Power Up Sequence

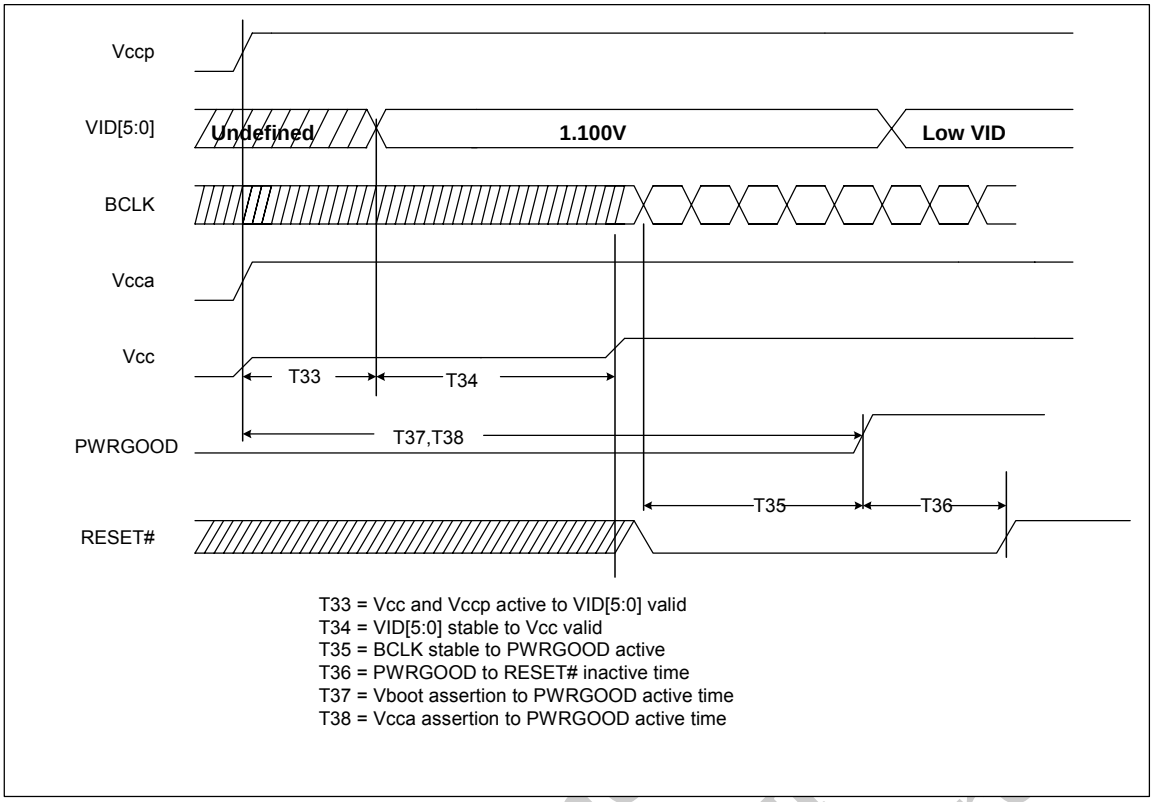


## Figure 4-10. Power Down Sequence

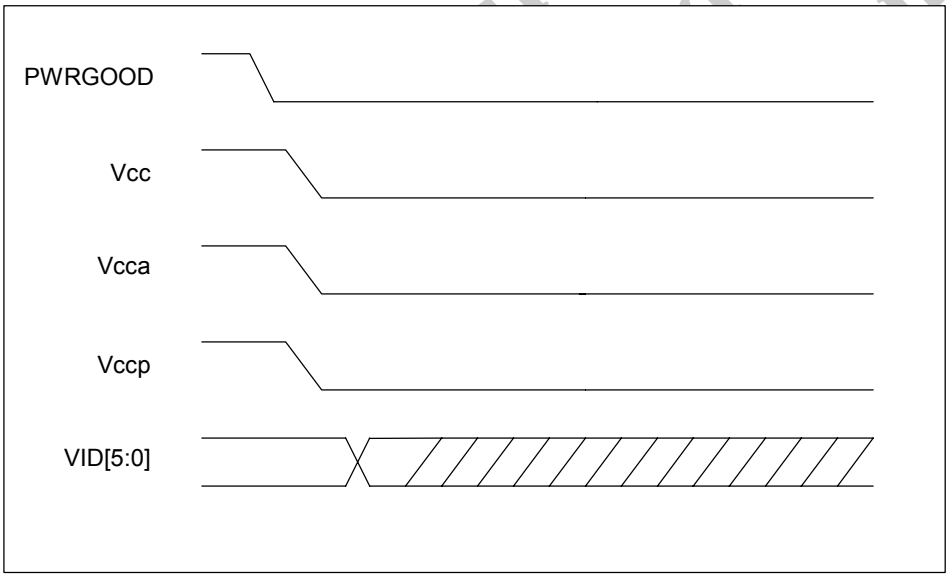

## Figure 4-11. PROCHOT# Timings

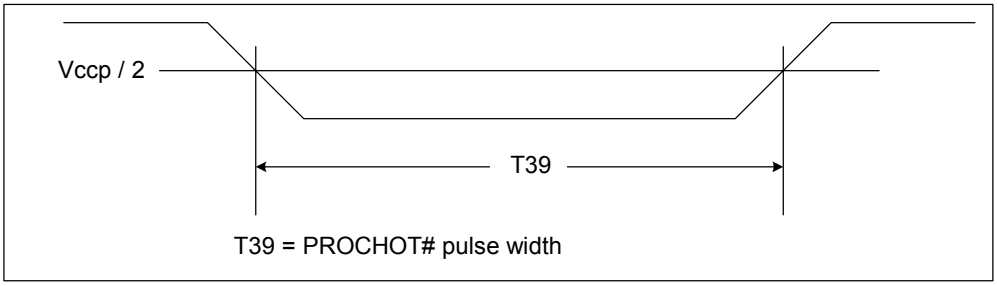


## Figure 4-12. FERR# Break Event Timing

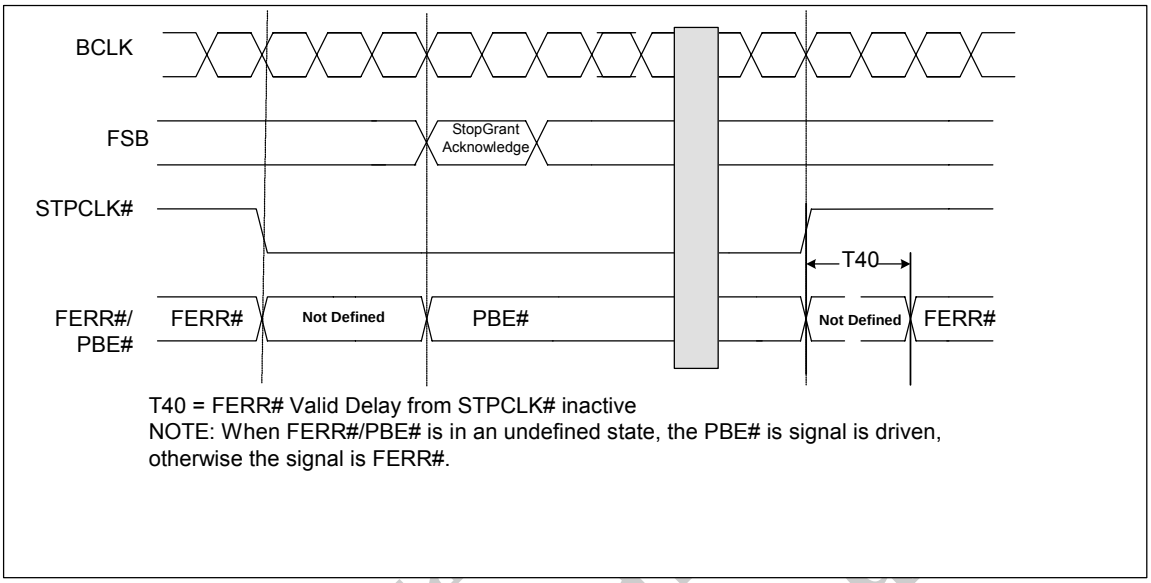


## Figure 4-13. THERMTRIP# Assertion to Vcc Turn Off Timing

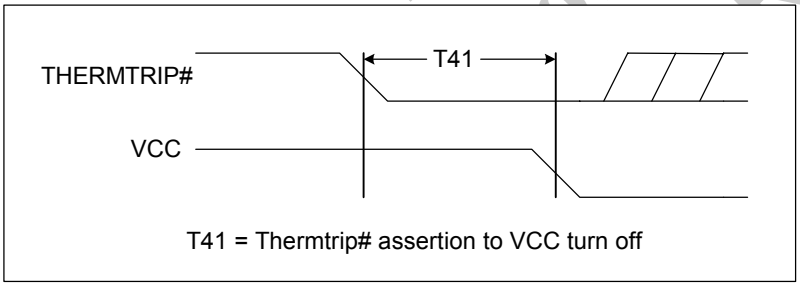

## Table 4-16. CMOS Signal and Power Up AC Specifications

| SYMBOL | PARAMETER | MIN | MAX | UNIT | FIGURE | NOTES[1] |
|---|---|---|---|---|---|---|
| | CMOS Input Pulse Width, except PWRGOOD | 3 | | BCLKs | | |
| T33 | $V_{CC}$ & $V_{CCP}$ assertion to VID valid | | 10 | µs | 9 | 5 |
| T34 | VID stable to $V_{CC}$ valid | | 100 | µs | 9 | |
| T35 | BCLK stable to PWRGOOD assertion | 10 | | BCLKs | 9, 14 | |
| T36 | PWRGOOD to RESET# de-assertion time | 2 | 10 | ms | 9, 14 | |
| T36A | PWRGOOD rise time | | 50 | ns | 9, 14 | 4 |
| T37 | $V_{BOOT}$ valid to PWRGOOD assertion | 10 | | µs | 9 | |
| T38 | $V_{CCA}$ assertion to PWRGOOD assertion | 2 | | µs | 9 | |
| T39 | PROCHOT# pulse width | 500 | | µs | 11 | 3 |
| T40 | FERR# Valid Delay from STPCLK# de-assertion | 0 | 5 | BCLKs | 12 | |
| T41 | THERMTRIP# assertion to Vcc turn off | | 500 | ms | 13 | |

**Notes:**

1. All CMOS signal timings are reference to VCCP/2.
2. CMOS signals are asynchronous in nature.
3. PROCHOT# assertion may not be exactly synchronized with thermal monitor enable.
4. Measured between 0.3*VCCP and 0.7*VCCP.
5. Defined as the time other system circuits can sample the VID signals.

VIA Technologies Inc.
Confidential
NDA Required

## Figure 4-14. FSB Reset and Configuration Timings

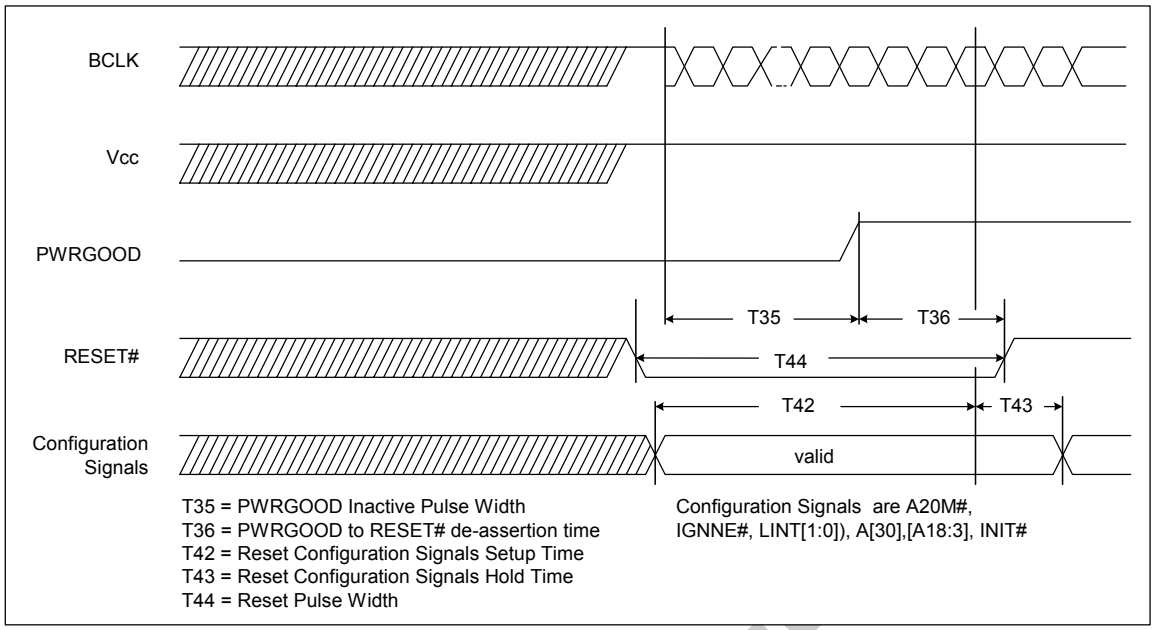


## Table 4-17. FSB Reset Conditions

| SYMBOL | PARAMETER | MIN | MAX | UNIT | FIGURE | NOTES |
|---|---|---|---|---|---|---|
| T42 | Reset Configuration Signals Setup Time | 1 | | µs | 14 | 1 |
| T43 | Reset Configuration Signals Hold Time | 2 | 20 | BCLKs | 14 | 2 |
| T44 | RESET# Pulse Width | 0.015 | 100 | ms | 14 | 3,4,5 |

**Notes:**

1. Before the de-assertion of RESET#.
2. After clock that de-asserts RESET#.
3. RESET# can be asserted asynchronously, but must be deasserted synchronously.
4. This should be measured after VCCP and BCLK[1:0] become stable.
5. Maximum specification applies only while PWRGOOD is asserted.

VIA Technologies Confidential NDA Required

## Figure 4-15. Stop Grant/Sleep/Deep Sleep Timings

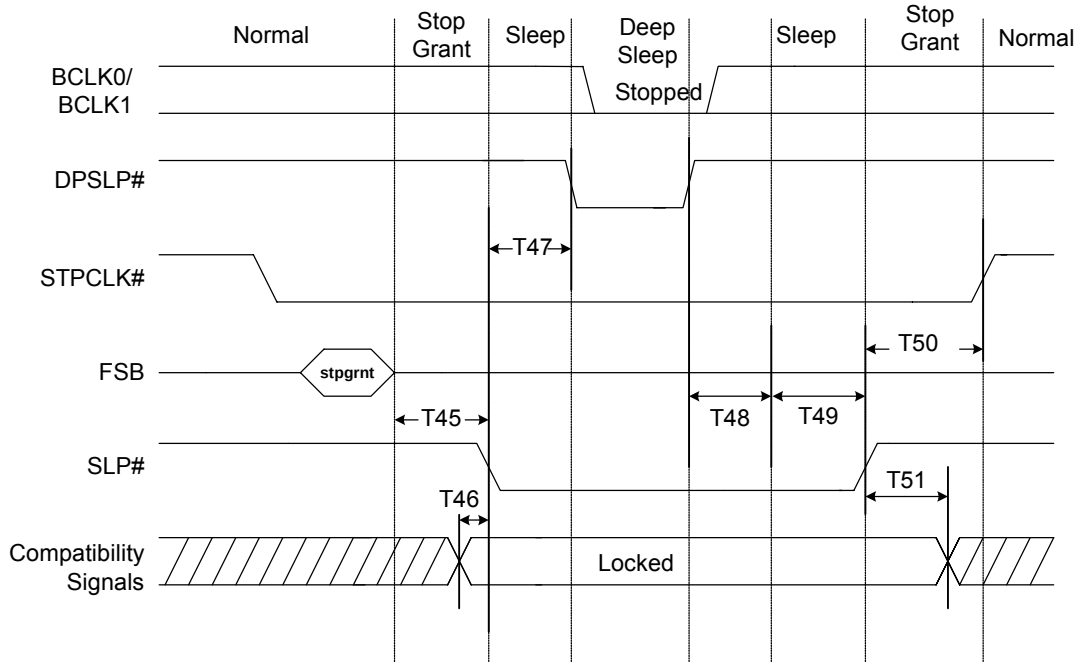


T45 = StopGrant Acknowledge Bus Cycle Completion to SLP# Active Delay
T46 = Input Signals Stable to SLP# Active Requirement
T47 = SLP# active to clock shut off delay
T48 = Deep Sleep PLL lock latency
T49 = SLP# Hold Time
T50 = STPCLK# Hold Time
T51 = Input Signal Hold Time

## Table 4-18. Stop Grant/Sleep/Deep Sleep AC Specifications

| SYMBOL | PARAMETER | MIN | MAX | UNIT | FIGURE | NOTES[1] |
|---|---|---|---|---|---|---|
| T45 | SLP# Signal Hold Time from Stop Grant Cycle Completion | 10 | | BLCKs | 15 | |
| T46 | Input Signals stable to SLP# assertion | 2 | | BLCKs | 15 | |
| T47 | SLP# assertion to DPSLP# assertion | 2 | | BLCKs | 15 | |
| T48 | Deep Sleep PLL Lock Latency | | 15 | µs | 15 | |
| T49 | SLP# Hold Time from PLL Lock | 0 | | ns | 15 | |
| T50 | STPCLK# Hold Time from SLP# de-assertion | 2 | | BLCKs | 15 | |
| T51 | Input Signal Hold Time from SLP# de-assertion | 2 | | BLCKs | 15 | |

**Notes:**

1. All input signals must maintain a constant state during sleep, except for RESET#.

## Figure 4-16. JTAG Waveform

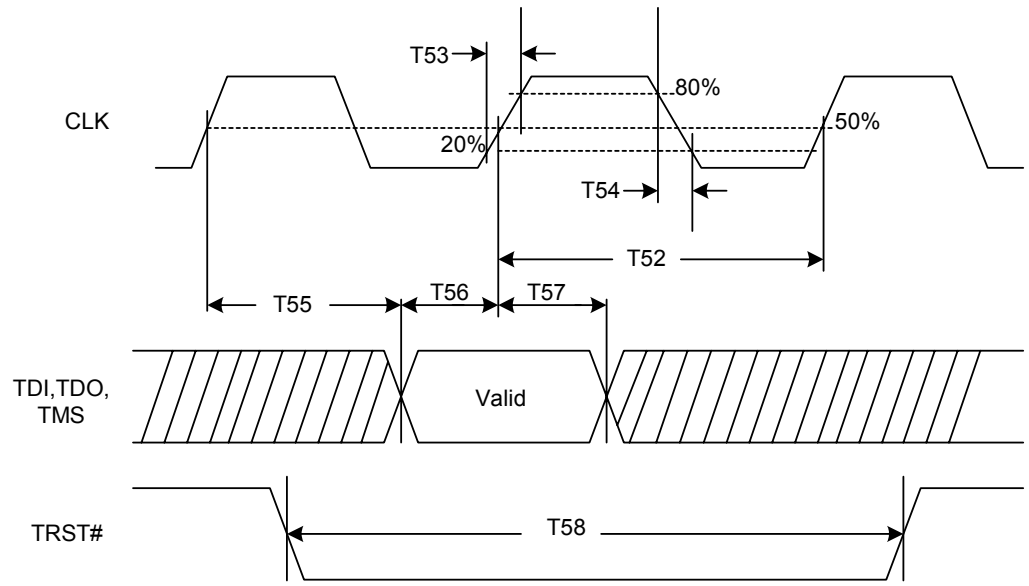


T52 = TCK Period
T53 = Rise Time
T54 = Fall Time
T55 = Clock to Output Delay
T56 = Setup Time
T57 = Hold Time
T58 = TRST# Pulse width

## Table 4-19. JTAG AC Specifications

| SYMBOL | PARAMETER | MIN | NOM | MAX | UNIT | FIGURE | NOTES[1] |
|---|---|---|---|---|---|---|---|
| T52 | TCK Period | 60 | | | ns | 16 | |
| T52A | TCK Duty cycle | 40 | | 60 | % | | |
| T53 | TCK Rise Time | | | 10 | ns | 16 | 4 |
| T54 | TCK Fall Time | | | 10 | ns | 16 | 4 |
| T55 | Clock to Output Delay | | | 3.5 | ns | 16 | 6 |
| T56 | Setup Time | 0 | | | ns | 16 | 5,7 |
| T57 | Hold Time | 3 | | | ns | 16 | 5,7 |
| T58 | TRST# Assertion Time | 2 | | | TCK | 16 | 8,9 |

VIA Technologies Confidential NDA Required

### Notes:

1. Guaranteed by design and not 100% tested.
2. AC timings for all JTAG signals are referenced to the TCK signal at 0.5 * Vccp at the processor pins.
3. Rise and fall times are measured from the 20% to 80% points of the signal swing.
4. Referenced to the rising edge of TCK.
5. Referenced to the falling edge of TCK.
6. Specifications for a minimum swing defined between Vccp $V_{IL}$ and $V_{IH}$.
7. TRST# must be held active for 2 TCK periods to be guaranteed that it is recognized by the processor.
8. It is recommended that TMS be asserted while TRST# is being deactivated.

## 4.3 POWER DISSIPATION

Table 4-20 gives the core power consumption for the VIA C7 processor at the various operating frequencies and voltages. Note that this does not include the power consumed by the I/O pads.

### Table 4-20. VIA C7 Thermal Design Power Information

| | VIA C7 2.0 GHz | | | | VIA C7 1.8 GHz | | | |
|---|---|---|---|---|---|---|---|---|
| Mode | MHz | Voltage | Power (W) | Ratio & VID encoding (Hex) | MHz | Voltage | Power (W) | Ratio & VID encoding (Hex) |
| Performance State P0 | **2000** | **1.148** | **20** | 141C | **1800** | **1.148** | **18** | 121C |
| Performance State P1 | 800 | 0.956 | | 0810 | 800 | 0.956 | | 0810 |
| HALT@50°C (C1) | 2000<br>800 | 1.148<br>0.956 | 5.0<br>2.5 | | 1800<br>800 | 1.148<br>0.956 | 5.0<br>2.5 | |
| StopGrant@50°C (C2) | 2000<br>800 | 1.148<br>0.956 | 5.0<br>2.5 | | 1800<br>400 | 1.148<br>0.956 | 5.0<br>2.5 | |
| Sleep@50°C | 2000<br>800 | 1.148<br>0.956 | 4.5<br>2.0 | | 1800<br>400 | 1.148<br>0.956 | 4.5<br>2.0 | |
| DeepSleep@35°C (C3) | na | 1.148<br>0.956 | 3.0<br>1.75 | | na | 1.148<br>0.956 | 3.0<br>1.75 | |
| DeeperSleep@35°C (C4) | na | 0.748 | 0.5 | | na | 0.748 | 0.5 | |

| | VIA C7 1.6 GHz | | | | VIA C7 1.5 GHz | | | |
|---|---|---|---|---|---|---|---|---|
| Mode | MHz | Voltage | Power (W) | Ratio & VID encoding (Hex) | MHz | Voltage | Power (W) | Ratio & VID encoding (Hex) |
| Performance State P0 | **1600** | **1.084** | **15** | 1018 | **1500** | **1.004** | **12** | 0F13 |
| Performance State P1 | 800 | 0.956 | | 0810 | 800 | 0.956 | | 0810 |
| HALT@50°C (C1) | 1600<br>800 | 1.084<br>0.956 | 4.0<br>2.5 | | 1500<br>800 | 1.004<br>0.956 | 3.5<br>2.5 | |
| StopGrant@50°C (C2) | 1600<br>800 | 1.084<br>0.956 | 4.0<br>2.5 | | 1500<br>800 | 1.004<br>0.956 | 3.5<br>2.5 | |
| Sleep@50°C | 1600<br>800 | 1.084<br>0.956 | 3.5<br>2.0 | | 1500<br>800 | 1.004<br>0.956 | 3.0<br>2.0 | |
| DeepSleep@35°C (C3) | na | 1.084<br>0.956 | 2.5<br>1.75 | | na | 1.004<br>0.956 | 2.5<br>1.75 | |
| DeeperSleep@35°C (C4) | na | 0.748 | 0.5 | | na | 0.748 | 0.5 | |

VIA Technologies, Inc.
Confidential
NDA Required

## Table 4-21. VIA C7 Thermal Design Power Information

| | VIA C7 1.0 GHz | | | | VIA C7 1.3 GHz | | | |
|---|---|---|---|---|---|---|---|---|
| **Mode** | **MHz** | **Voltage** | **Power (W)** | **Ratio & VID encoding (Hex)** | **MHz** | **Voltage** | **Power (W)** | **Ratio & VID encoding (Hex)** |
| **Performance State P0** | **1000** | **1.004** | 9 | 0A13 | **1300** | **1.004** | 12 | 0D13 |
| **Performance State P1** | 800 | 0.956 | | 0810 | 800 | 0.956 | | 0810 |
| **HALT@50°C (C1)** | 1000<br>800 | 1.004<br>0.956 | 3.5<br>2.5 | | 1300<br>800 | 1.004<br>0.956 | 3.5<br>2.5 | |
| **StopGrant@50°C (C2)** | 1000<br>800 | 1.004<br>0.956 | 3.5<br>2.5 | | 1300<br>800 | 1.004<br>0.956 | 3.5<br>2.5 | |
| **Sleep@50°C** | 1000<br>800 | 1.004<br>0.956 | 3.0<br>2.0 | | 1300<br>800 | 1.004<br>0.956 | 3.0<br>2.0 | |
| **DeepSleep@35°C (C3)** | na | 1.004<br>0.956 | 2.5<br>1.75 | | Na | 1.004<br>0.956 | 2.5<br>1.75 | |
| **DeeperSleep@35°C (C4)** | na | 0.748 | 0.5 | | Na | 0.748 | 0.5 | |

| | VIA C7 1.5 GHz | | | | | | | |
|---|---|---|---|---|---|---|---|---|
| **Mode** | **MHz** | **Voltage** | **Power (W)** | **Ratio & VID encoding (Hex)** | | | | |
| **Performance State P0** | **1500** | **1.084** | 25 | 0F18 | | | | |
| **HALT@50°C (C1)** | 1500 | 1.084 | 7 | | | | | |
| **StopGrant@50°C (C2)** | 1500 | 1.084 | 7 | | | | | |
| **Sleep@50°C** | 1500 | 1.084 | 7 | | | | | |
| **DeepSleep@35°C (C3)** | na | 1.084 | 6 | | | | | |
| **DeeperSleep@35°C (C4)** | na | 0.748 | 2 | | | | | |

**Notes:**

1. Maximum power is generated from running publicly available application software that consumes the most power. Synthetic applications or "thermal virus" applications may consume more power.
2. The above power consumption is preliminary and based on 100°C junction temperature except as noted.
3. Conservative thermal solutions must be designed to account for worst-case core and I/O power consumption.

## Table 4-22. $V_{CCP}$ -I/O Power Consumption

| PARAMETER | TYPICAL | MAX | UNITS | NOTES |
|---|---|---|---|---|
| PTT-I/O – I/O Operating Power Consumption | 0.25 | 1.2 | W | |

VIA Technologies Inc.
Confidential
NDA Required

This page is intentionally left blank.

VIA Technologies Inc.
Confidential
NDA Required

SECTION

5

# MECHANICAL SPECIFICATIONS

VIA Technologies Inc.
Confidential
NDA Required

## 5.1 NANOBGA2 PACKAGE

The VIA C7 processor is available in a very diminutive (21mm x 21mm) package, the nanoBGA2.

## Figure 5-1. nanoBGA2 Ballout (Top View)

| | 1 | 2 | 3 | 4 | 5 | 6 | 7 | 8 | 9 | 10 | 11 | 12 | 13 | 14 | 15 | 16 | 17 | 18 | 19 | 20 | |
|---|---|---|---|---|---|---|---|---|---|---|---|---|---|---|---|---|---|---|---|---|---|
| A | DBSY# | DEFER# | RS1# | DRDY# | VID5 | VID4 | VID2 | FERR# | VCCA1 | INIT# | SLP# | VSS | BCLK# | BCLK | TDO | THERM TRIP# | THERM DC | DPWR# | VSS | D0# | A |
| B | ADS# | TRDY# | HIT# | RS0# | RSVD | VID3 | VID0 | INTR | A20M# | STP CLK# | DP SLP# | BEVO0 | VSS | VSS | TMS | TRST# | RSVD | PROC HOT# | D8# | VSS | B |
| C | BREQ0# | VSS | HITM# | BPRI# | BREQ2# | VID1 | PSI# | PWRGD | NMI | SMI# | BEVO2 | BEVO1 | RESET# | BSEL0 | TDI | TCK | THERM DA | D7# | D3# | D6# | C |
| D | REQ0# | REQ1# | BNR# | LOCK# | BREQ3# | VSS | VSS | VCCP | IGNNE# | VSS | BEVO3 | VCCP | VSS | BSEL1 | VSS | VCCP | VSS | D2# | VSS | D13# | D |
| E | RSVD | VSS | RS2# | VSS | VSS | VCC | VSS | VCCP | VSS | VCC | VSS | VCCP | VSS | VCC | VSS | VCCP | VSS | D4# | DSTB P0# | D9# | E |
| F | REQ2# | A6# | A3# | VSS | VCCP | VSS | VCC | VSS | VCC | VSS | VCC | VSS | VCC | VSS | VCC | VSS | VCCA0 | D1# | DSTB N0# | D14# | F |
| G | ASTB N0# | ASTB P0# | A9# | VCCP | VSS | VCC | VSS | VCC | VSS | VCC | VSS | VCC | VSS | VCC | VSS | VCC | VCCP | D11# | VSS | D10# | G |
| H | VSS | VSS | A4# | VSS | VCC | VSS | VCC | VSS | VCC | VSS | VCC | VSS | VCC | VSS | VCC | VSS | COMP0 | D15# | DINV0# | D5# | H |
| J | A5# | A7# | A13# | VSS | VSS | VCC | VSS | VCC | VSS | VCC | VSS | VCC | VSS | VCC | VSS | VCC | VSS | D12# | VSS | DP0# | J |
| K | A8# | VSS | A10# | VSS | VCC | VSS | VCC | VSS | VCC | VSS | VCC | VSS | VCC | VSS | VCC | VSS | VCCP | VSS | D21# | D22# | K |
| L | A15# | A11# | A12# | VCCP | VSS | VCC | VSS | VCC | VSS | VCC | VSS | VCC | VSS | VCC | VSS | VCC | VCCP | D17# | D16# | VSS | L |
| M | A16# | VSS | A14# | VSS | VCCP | VSS | VCC | VSS | VCC | VSS | VCC | VSS | VCC | VSS | VCC | VSS | VSS | VSS | D29# | D20# | M |
| N | A30# | A17# | A18# | RSVD | VSS | VCC | VSS | VCC | VSS | VCC | VSS | VCC | VSS | VCC | VSS | VCC | VSS | DINV1# | VSS | D23# | N |
| P | CF0 | CF3 | CF6 | CF8 | VCCP | VSS | VCC | VSS | VCC | VSS | VCC | VSS | VCC | VSS | VCC | VSS | VSS | D26# | D25# | VSS | P |
| R | CF1 | CF4 | CF7 | VCCP | VSS | VCC | VSS | VCC | VSS | VCC | VSS | VCC | VSS | VCC | VSS | VCC | VCCP | DP1# | D24# | D31# | R |
| T | CF2 | CF5 | COMP2 | VSS | VCC | VSS | VCC | VSS | VCC | VSS | VCC | VSS | VCC | VSS | VCC | VSS | VSS | D30# | VSS | DSTB N1# | T |
| U | BREQ1# | RSVD | VCC SENSE | VSS SENSE | MPI | VSS | VSS | VCCP | VCCP | VSS | VCCP | VSS | VCCP | VCCP | VSS | VSS | VCCP | D27# | D18# | DSTB P1# | U |
| V | VCCP | VCCP | D58# | D62# | DINV3# | D56# | D61# | D63# | D57# | D50# | DP2# | D46# | D33# | D47# | DSTB N2# | D36# | DINV2# | D39# | D19# | VSS | V |
| W | RSVD | VCCP | VSS | D51# | D55# | VSS | D52# | D54# | VSS | D48# | VSS | D40# | VSS | D44# | DSTB P2# | VSS | D35# | D38# | VSS | D28# | W |
| Y | RSVD | VSS | D59# | D60# | DSTB N3# | DSTB P3# | VSS | D49# | D53# | DP3# | D45# | D32# | D42# | D41# | VSS | D43# | D34# | VSS | D37# | RSVD | Y |
| | 1 | 2 | 3 | 4 | 5 | 6 | 7 | 8 | 9 | 10 | 11 | 12 | 13 | 14 | 15 | 16 | 17 | 18 | 19 | 20 | |

VSS VCC VCCP Other

VIA Technologies, Inc
Confidential
NDA Required

## Table 5-1. Signal Listing in Order by Signal Name

| Ball Name | Ball No | Type |
|---|---|---|
| A3# | F3 | Source_Synch |
| A4# | H3 | Source_Synch |
| A5# | J1 | Source_Synch |
| A6# | F2 | Source_Synch |
| A7# | J2 | Source_Synch |
| A8# | K1 | Source_Synch |
| A9# | G3 | Source_Synch |
| A10# | K3 | Source_Synch |
| A11# | L2 | Source_Synch |
| A12# | L3 | Source_Synch |
| A13# | J3 | Source_Synch |
| A14# | M3 | Source_Synch |
| A15# | L1 | Source_Synch |
| A16# | M1 | Source_Synch |
| A17# | N2 | Source_Synch |
| A18# | N3 | Source_Synch |
| A20M# | B9 | CMOS |
| A30# | N1 | Source_Synch |
| ADS# | B1 | Common_Clock |
| ADSTBN0# | G1 | Source_Synch |
| ADSTBP0# | G2 | Source_Synch |
| BCLK | A14 | Bus_Clock |
| BCLK# | A13 | Bus_Clock |
| BEVO0 | B12 | CMOS |
| BEVO1 | C12 | CMOS |
| BEVO2 | C11 | CMOS |
| BEVO3 | D11 | CMOS |
| BNR# | D3 | Common_Clock |
| BPRI# | C4 | Common_Clock |
| BREQ0# | C1 | Common_Clock |
| BREQ1# | U1 | Common_Clock |
| BREQ2# | C5 | Common_Clock |
| BREQ3# | D5 | Common_Clock |
| BSEL0 | C14 | CMOS |
| BSEL1 | D14 | CMOS |
| CF0 | P1 | Power/Other |
| CF1 | R1 | Power/Other |
| CF2 | T1 | Power/Other |
| CF3 | P2 | Power/Other |

| Ball Name | Ball No | Type |
|---|---|---|
| CF4 | R2 | Power/Other |
| CF5 | T2 | Power/Other |
| CF6 | P3 | Power/Other |
| CF7 | R3 | Power/Other |
| CF8 | P4 | Power/Other |
| COMP0 | H17 | Power/Other |
| COMP2 | T3 | Power/Other |
| D0# | A20 | Source_Synch |
| D1# | F18 | Source_Synch |
| D2# | D18 | Source_Synch |
| D3# | C19 | Source_Synch |
| D4# | E18 | Source_Synch |
| D5# | H20 | Source_Synch |
| D6# | C20 | Source_Synch |
| D7# | C18 | Source_Synch |
| D8# | B19 | Source_Synch |
| D9# | E20 | Source_Synch |
| D10# | G20 | Source_Synch |
| D11# | G18 | Source_Synch |
| D12# | J18 | Source_Synch |
| D13# | D20 | Source_Synch |
| D14# | F20 | Source_Synch |
| D15# | H18 | Source_Synch |
| D16# | L19 | Source_Synch |
| D17# | L18 | Source_Synch |
| D18# | U19 | Source_Synch |
| D19# | V19 | Source_Synch |
| D20# | M20 | Source_Synch |
| D21# | K19 | Source_Synch |
| D22# | K20 | Source_Synch |
| D23# | N20 | Source_Synch |
| D24# | R19 | Source_Synch |
| D25# | P19 | Source_Synch |
| D26# | P18 | Source_Synch |
| D27# | U18 | Source_Synch |
| D28# | W20 | Source_Synch |
| D29# | M19 | Source_Synch |
| D30# | T18 | Source_Synch |
| D31# | R20 | Source_Synch |

VIA Technologies Inc. Confidential NDA Required

## Table 5-1. Signal Listing in Order by Signal Name (Continued)

| Ball Name | Ball No | Type |
|---|---|---|
| D32# | Y12 | Source_Synch |
| D33# | V13 | Source_Synch |
| D34# | Y17 | Source_Synch |
| D35# | W17 | Source_Synch |
| D36# | V16 | Source_Synch |
| D37# | Y19 | Source_Synch |
| D38# | W18 | Source_Synch |
| D39# | V18 | Source_Synch |
| D40# | W12 | Source_Synch |
| D41# | Y14 | Source_Synch |
| D42# | Y13 | Source_Synch |
| D43# | Y16 | Source_Synch |
| D44# | W14 | Source_Synch |
| D45# | Y11 | Source_Synch |
| D46# | V12 | Source_Synch |
| D47# | V14 | Source_Synch |
| D48# | W10 | Source_Synch |
| D49# | Y8 | Source_Synch |
| D50# | V10 | Source_Synch |
| D51# | W4 | Source_Synch |
| D52# | W7 | Source_Synch |
| D53# | Y9 | Source_Synch |
| D54# | W8 | Source_Synch |
| D55# | W5 | Source_Synch |
| D56# | V6 | Source_Synch |
| D57# | V9 | Source_Synch |
| D58# | V3 | Source_Synch |
| D59# | Y3 | Source_Synch |
| D60# | Y4 | Source_Synch |
| D61# | V7 | Source_Synch |
| D62# | V4 | Source_Synch |
| D63# | V8 | Source_Synch |
| DBSY# | A1 | Common_Clock |
| DEFER# | A2 | Common_Clock |
| DINV0# | H19 | Source_Synch |
| DINV1# | N18 | Source_Synch |
| DINV2# | V17 | Source_Synch |
| DINV3# | V5 | Source_Synch |
| DP0# | J20 | Source_Synch |

| Ball Name | Ball No | Type |
|---|---|---|
| DP1# | R18 | Source_Synch |
| DP2# | V11 | Source_Synch |
| DP3# | Y10 | Source_Synch |
| DPSLP# | B11 | CMOS |
| DPWR# | A18 | Common_Clock |
| DRDY# | A4 | Common_Clock |
| DSTBN0# | F19 | Source_Synch |
| DSTBN1# | T20 | Source_Synch |
| DSTBN2# | V15 | Source_Synch |
| DSTBN3# | Y5 | Source_Synch |
| DSTBP0# | E19 | Source_Synch |
| DSTBP1# | U20 | Source_Synch |
| DSTBP2# | W15 | Source_Synch |
| DSTBP3# | Y6 | Source_Synch |
| FERR# | A8 | Open_Drain |
| HIT# | B3 | Common_Clock |
| HITM# | C3 | Common_Clock |
| IGNNE# | D9 | CMOS |
| INIT# | A10 | CMOS |
| INTR | B8 | CMOS |
| LOCK# | D4 | Common_Clock |
| MPI | U5 | Power/Other |
| NMI | C9 | CMOS |
| PROCHOT# | B18 | Open_Drain |
| PSI# | C7 | CMOS |
| PWRGOOD | C8 | CMOS |
| REQ0# | D1 | Source_Synch |
| REQ1# | D2 | Source_Synch |
| REQ2# | F1 | Source_Synch |
| RESET# | C13 | Common_Clock |
| RS0# | B4 | Common_Clock |
| RS1# | A3 | Common_Clock |
| RS2# | E3 | Common_Clock |
| RSVD | B5 | Reserved |
| RSVD | B17 | Reserved |
| RSVD | E1 | Reserved |
| RSVD | N4 | Reserved |
| RSVD | U2 | Reserved |
| RSVD | W1 | Reserved |

VIA Technologies Inc.
Confidential
NDA Required

## Table 5-1. Signal Listing in Order by Signal Name (Continued)

| Ball Name | Ball No | Type |
|---|---|---|
| RSVD | Y1 | Reserved |
| RSVD | Y20 | Reserved |
| SLP# | A11 | CMOS |
| SMI# | C10 | CMOS |
| STPCLK# | B10 | CMOS |
| TCK | C16 | CMOS |
| TDI | C15 | CMOS |
| TDO | A15 | Open_Drain |
| THERMDA | C17 | Power/Other |
| THERMDC | A17 | Power/Other |
| THERMTRIP# | A16 | Open_Drain |
| TMS | B15 | CMOS |
| TRDY# | B2 | Common_Clock |
| TRST# | B16 | CMOS |
| VCC | E6 | Power/Other |
| VCC | E10 | Power/Other |
| VCC | E14 | Power/Other |
| VCC | F7 | Power/Other |
| VCC | F9 | Power/Other |
| VCC | F11 | Power/Other |
| VCC | F13 | Power/Other |
| VCC | F15 | Power/Other |
| VCC | G6 | Power/Other |
| VCC | G8 | Power/Other |
| VCC | G10 | Power/Other |
| VCC | G12 | Power/Other |
| VCC | G14 | Power/Other |
| VCC | G16 | Power/Other |
| VCC | H5 | Power/Other |
| VCC | H7 | Power/Other |
| VCC | H9 | Power/Other |
| VCC | H11 | Power/Other |
| VCC | H13 | Power/Other |
| VCC | H15 | Power/Other |
| VCC | J6 | Power/Other |
| VCC | J8 | Power/Other |
| VCC | J10 | Power/Other |
| VCC | J12 | Power/Other |
| VCC | J14 | Power/Other |

| Ball Name | Ball No | Type |
|---|---|---|
| VCC | J16 | Power/Other |
| VCC | K5 | Power/Other |
| VCC | K7 | Power/Other |
| VCC | K9 | Power/Other |
| VCC | K11 | Power/Other |
| VCC | K13 | Power/Other |
| VCC | K15 | Power/Other |
| VCC | L6 | Power/Other |
| VCC | L8 | Power/Other |
| VCC | L10 | Power/Other |
| VCC | L12 | Power/Other |
| VCC | L14 | Power/Other |
| VCC | L16 | Power/Other |
| VCC | M7 | Power/Other |
| VCC | M9 | Power/Other |
| VCC | M11 | Power/Other |
| VCC | M13 | Power/Other |
| VCC | M15 | Power/Other |
| VCC | N6 | Power/Other |
| VCC | N8 | Power/Other |
| VCC | N10 | Power/Other |
| VCC | N12 | Power/Other |
| VCC | N14 | Power/Other |
| VCC | N16 | Power/Other |
| VCC | P7 | Power/Other |
| VCC | P9 | Power/Other |
| VCC | P11 | Power/Other |
| VCC | P13 | Power/Other |
| VCC | P15 | Power/Other |
| VCC | R6 | Power/Other |
| VCC | R8 | Power/Other |
| VCC | R10 | Power/Other |
| VCC | R12 | Power/Other |
| VCC | R14 | Power/Other |
| VCC | R16 | Power/Other |
| VCC | T5 | Power/Other |
| VCC | T7 | Power/Other |
| VCC | T9 | Power/Other |
| VCC | T11 | Power/Other |

VIA Technologies Inc. Confidential NDA Required

## Table 5-1. Signal Listing in Order by Signal Name (Continued)

| Ball Name | Ball No | Type |
|---|---|---|
| VCC | T13 | Power/Other |
| VCC | T15 | Power/Other |
| VCCA0 | F17 | Power/Other |
| VCCA1 | A9 | Power/Other |
| VCCP | D8 | Power/Other |
| VCCP | D12 | Power/Other |
| VCCP | D16 | Power/Other |
| VCCP | E8 | Power/Other |
| VCCP | E12 | Power/Other |
| VCCP | E16 | Power/Other |
| VCCP | F5 | Power/Other |
| VCCP | G4 | Power/Other |
| VCCP | G17 | Power/Other |
| VCCP | K17 | Power/Other |
| VCCP | L4 | Power/Other |
| VCCP | L17 | Power/Other |
| VCCP | M5 | Power/Other |
| VCCP | P5 | Power/Other |
| VCCP | R4 | Power/Other |
| VCCP | R17 | Power/Other |
| VCCP | U8 | Power/Other |
| VCCP | U9 | Power/Other |
| VCCP | U11 | Power/Other |
| VCCP | U13 | Power/Other |
| VCCP | U14 | Power/Other |
| VCCP | U17 | Power/Other |
| VCCP | V1 | Power/Other |
| VCCP | V2 | Power/Other |
| VCCP | W2 | Power/Other |
| VCC SENSE | U3 | Power/Other |
| VID0 | B7 | Power/Other |
| VID1 | C6 | Power/Other |
| VID2 | A7 | Power/Other |
| VID3 | B6 | Power/Other |
| VID4 | A6 | Power/Other |
| VID5 | A5 | Power/Other |
| VSS | A12 | Power/Other |
| VSS | A19 | Power/Other |
| VSS | B13 | Power/Other |

| Ball Name | Ball No | Type |
|---|---|---|
| VSS | B14 | Power/Other |
| VSS | B20 | Power/Other |
| VSS | C2 | Power/Other |
| VSS | D6 | Power/Other |
| VSS | D7 | Power/Other |
| VSS | D10 | Power/Other |
| VSS | D13 | Power/Other |
| VSS | D15 | Power/Other |
| VSS | D17 | Power/Other |
| VSS | D19 | Power/Other |
| VSS | E2 | Power/Other |
| VSS | E4 | Power/Other |
| VSS | E5 | Power/Other |
| VSS | E7 | Power/Other |
| VSS | E9 | Power/Other |
| VSS | E11 | Power/Other |
| VSS | E13 | Power/Other |
| VSS | E15 | Power/Other |
| VSS | E17 | Power/Other |
| VSS | F4 | Power/Other |
| VSS | F6 | Power/Other |
| VSS | F8 | Power/Other |
| VSS | F10 | Power/Other |
| VSS | F12 | Power/Other |
| VSS | F14 | Power/Other |
| VSS | F16 | Power/Other |
| VSS | G5 | Power/Other |
| VSS | G7 | Power/Other |
| VSS | G9 | Power/Other |
| VSS | G11 | Power/Other |
| VSS | G13 | Power/Other |
| VSS | G15 | Power/Other |
| VSS | G19 | Power/Other |
| VSS | H1 | Power/Other |
| VSS | H2 | Power/Other |
| VSS | H4 | Power/Other |
| VSS | H6 | Power/Other |
| VSS | H8 | Power/Other |
| VSS | H10 | Power/Other |

VIA Technologies Inc.
Confidential
NDA Required

## Table 5-1. Signal Listing in Order by Signal Name (Continued)

| Ball Name | Ball No | Type |
|---|---|---|
| VSS | H12 | Power/Other |
| VSS | H14 | Power/Other |
| VSS | H16 | Power/Other |
| VSS | J4 | Power/Other |
| VSS | J5 | Power/Other |
| VSS | J7 | Power/Other |
| VSS | J9 | Power/Other |
| VSS | J11 | Power/Other |
| VSS | J13 | Power/Other |
| VSS | J15 | Power/Other |
| VSS | J17 | Power/Other |
| VSS | J19 | Power/Other |
| VSS | K2 | Power/Other |
| VSS | K4 | Power/Other |
| VSS | K6 | Power/Other |
| VSS | K8 | Power/Other |
| VSS | K10 | Power/Other |
| VSS | K12 | Power/Other |
| VSS | K14 | Power/Other |
| VSS | K16 | Power/Other |
| VSS | K18 | Power/Other |
| VSS | L5 | Power/Other |
| VSS | L7 | Power/Other |
| VSS | L9 | Power/Other |
| VSS | L11 | Power/Other |
| VSS | L13 | Power/Other |
| VSS | L15 | Power/Other |
| VSS | L20 | Power/Other |
| VSS | M2 | Power/Other |
| VSS | M4 | Power/Other |
| VSS | M6 | Power/Other |
| VSS | M8 | Power/Other |
| VSS | M10 | Power/Other |
| VSS | M12 | Power/Other |
| VSS | M14 | Power/Other |
| VSS | M16 | Power/Other |
| VSS | M17 | Power/Other |
| VSS | M18 | Power/Other |
| VSS | N5 | Power/Other |

| Ball Name | Ball No | Type |
|---|---|---|
| VSS | N7 | Power/Other |
| VSS | N9 | Power/Other |
| VSS | N11 | Power/Other |
| VSS | N13 | Power/Other |
| VSS | N15 | Power/Other |
| VSS | N17 | Power/Other |
| VSS | N19 | Power/Other |
| VSS | P6 | Power/Other |
| VSS | P8 | Power/Other |
| VSS | P10 | Power/Other |
| VSS | P12 | Power/Other |
| VSS | P14 | Power/Other |
| VSS | P16 | Power/Other |
| VSS | P17 | Power/Other |
| VSS | P20 | Power/Other |
| VSS | R5 | Power/Other |
| VSS | R7 | Power/Other |
| VSS | R9 | Power/Other |
| VSS | R11 | Power/Other |
| VSS | R13 | Power/Other |
| VSS | R15 | Power/Other |
| VSS | T4 | Power/Other |
| VSS | T6 | Power/Other |
| VSS | T8 | Power/Other |
| VSS | T10 | Power/Other |
| VSS | T12 | Power/Other |
| VSS | T14 | Power/Other |
| VSS | T16 | Power/Other |
| VSS | T17 | Power/Other |
| VSS | T19 | Power/Other |
| VSS | U6 | Power/Other |
| VSS | U7 | Power/Other |
| VSS | U10 | Power/Other |
| VSS | U12 | Power/Other |
| VSS | U15 | Power/Other |
| VSS | U16 | Power/Other |
| VSS | V20 | Power/Other |
| VSS | W3 | Power/Other |
| VSS | W6 | Power/Other |

VIA Technologies Inc. Confidential NDA Required

## Table 5-1. Signal Listing in Order by Signal Name (Continued)

| | | |
|---|---|---|
| VSS | W9 | Power/Other |
| VSS | W11 | Power/Other |
| VSS | W13 | Power/Other |
| VSS | W16 | Power/Other |
| VSS | W19 | Power/Other |
| VSS | Y2 | Power/Other |
| VSS | Y7 | Power/Other |
| VSS | Y15 | Power/Other |
| VSS | Y18 | Power/Other |
| VSS SENSE | U4 | Power/Other |

VIA Technologies Inc.
Confidential
NDA Required

## Table 5-2. Signal Listing in Order by Ball Number

| Ball Name | Ball No | Type |
|---|---|---|
| DBSY# | A1 | Common_Clock |
| DEFER# | A2 | Common_Clock |
| RS1# | A3 | Common_Clock |
| DRDY# | A4 | Common_Clock |
| VID5 | A5 | Power/Other |
| VID4 | A6 | Power/Other |
| VID2 | A7 | Power/Other |
| FERR# | A8 | Open_Drain |
| VCCA1 | A9 | Power/Other |
| INIT# | A10 | CMOS |
| SLP# | A11 | CMOS |
| VSS | A12 | Power/Other |
| BCLK# | A13 | Bus_Clock |
| BCLK | A14 | Bus_Clock |
| TDO | A15 | Open_Drain |
| THERMTRIP# | A16 | Open_Drain |
| THERMDC | A17 | Power/Other |
| DPWR# | A18 | Common_Clock |
| VSS | A19 | Power/Other |
| D0# | A20 | Source_Synch |
| ADS# | B1 | Common_Clock |
| TRDY# | B2 | Common_Clock |
| HIT# | B3 | Common_Clock |
| RS0# | B4 | Common_Clock |
| RSVD | B5 | Reserved |
| VID3 | B6 | Power/Other |
| VID0 | B7 | Power/Other |
| INTR | B8 | CMOS |
| A20M# | B9 | CMOS |
| STPCLK# | B10 | CMOS |
| DPSLP# | B11 | CMOS |
| BEVO0 | B12 | CMOS |
| VSS | B13 | Power/Other |
| VSS | B14 | Power/Other |
| TMS | B15 | CMOS |
| TRST# | B16 | CMOS |
| RSVD | B17 | Reserved |
| PROCHOT# | B18 | Open_Drain |
| D8# | B19 | Source_Synch |

| Ball Name | Ball No | Type |
|---|---|---|
| VSS | B20 | Power/Other |
| BREQ0# | C1 | Common_Clock |
| VSS | C2 | Power/Other |
| HITM# | C3 | Common_Clock |
| BPRI# | C4 | Common_Clock |
| BREQ2# | C5 | Common_Clock |
| VID1 | C6 | Power/Other |
| PSI# | C7 | CMOS |
| PWRGOOD | C8 | CMOS |
| NMI | C9 | CMOS |
| SMI# | C10 | CMOS |
| BEVO2 | C11 | CMOS |
| BEVO1 | C12 | CMOS |
| RESET# | C13 | Common_Clock |
| BSEL0 | C14 | CMOS |
| TDI | C15 | CMOS |
| TCK | C16 | CMOS |
| THERMDA | C17 | Power/Other |
| D7# | C18 | Source_Synch |
| D3# | C19 | Source_Synch |
| D6# | C20 | Source_Synch |
| REQ0# | D1 | Source_Synch |
| REQ1# | D2 | Source_Synch |
| BNR# | D3 | Common_Clock |
| LOCK# | D4 | Common_Clock |
| BREQ3# | D5 | Common_Clock |
| VSS | D6 | Power/Other |
| VSS | D7 | Power/Other |
| VCCP | D8 | Power/Other |
| IGNNE# | D9 | CMOS |
| VSS | D10 | Power/Other |
| BEVO3 | D11 | CMOS |
| VCCP | D12 | Power/Other |
| VSS | D13 | Power/Other |
| BSEL1 | D14 | CMOS |
| VSS | D15 | Power/Other |
| VCCP | D16 | Power/Other |
| VSS | D17 | Power/Other |
| D2# | D18 | Source_Synch |

VIA Technologies Inc.
Confidential
NDA Required

## Table 5-2. Signal Listing in Order by Ball Number (Continued)

| Ball Name | Ball No | Type |
|---|---|---|
| VSS | D19 | Power/Other |
| D13# | D20 | Source_Synch |
| RSVD | E1 | Reserved |
| VSS | E2 | Power/Other |
| RS2# | E3 | Common_Clock |
| VSS | E4 | Power/Other |
| VSS | E5 | Power/Other |
| VCC | E6 | Power/Other |
| VSS | E7 | Power/Other |
| VCCP | E8 | Power/Other |
| VSS | E9 | Power/Other |
| VCC | E10 | Power/Other |
| VSS | E11 | Power/Other |
| VCCP | E12 | Power/Other |
| VSS | E13 | Power/Other |
| VCC | E14 | Power/Other |
| VSS | E15 | Power/Other |
| VCCP | E16 | Power/Other |
| VSS | E17 | Power/Other |
| D4# | E18 | Source_Synch |
| DSTBP0# | E19 | Source_Synch |
| D9# | E20 | Source_Synch |
| REQ2# | F1 | Source_Synch |
| A6# | F2 | Source_Synch |
| A3# | F3 | Source_Synch |
| VSS | F4 | Power/Other |
| VCCP | F5 | Power/Other |
| VSS | F6 | Power/Other |
| VCC | F7 | Power/Other |
| VSS | F8 | Power/Other |
| VCC | F9 | Power/Other |
| VSS | F10 | Power/Other |
| VCC | F11 | Power/Other |
| VSS | F12 | Power/Other |
| VCC | F13 | Power/Other |
| VSS | F14 | Power/Other |
| VCC | F15 | Power/Other |
| VSS | F16 | Power/Other |
| VCCA0 | F17 | Power/Other |

| Ball Name | Ball No | Type |
|---|---|---|
| D1# | F18 | Source_Synch |
| DSTBN0# | F19 | Source_Synch |
| D14# | F20 | Source_Synch |
| ADSTBN0# | G1 | Source_Synch |
| ADSTBP0# | G2 | Source_Synch |
| A9# | G3 | Source_Synch |
| VCCP | G4 | Power/Other |
| VSS | G5 | Power/Other |
| VCC | G6 | Power/Other |
| VSS | G7 | Power/Other |
| VCC | G8 | Power/Other |
| VSS | G9 | Power/Other |
| VCC | G10 | Power/Other |
| VSS | G11 | Power/Other |
| VCC | G12 | Power/Other |
| VSS | G13 | Power/Other |
| VCC | G14 | Power/Other |
| VSS | G15 | Power/Other |
| VCC | G16 | Power/Other |
| VCCP | G17 | Power/Other |
| D11# | G18 | Source_Synch |
| VSS | G19 | Power/Other |
| D10# | G20 | Source_Synch |
| VSS | H1 | Power/Other |
| VSS | H2 | Power/Other |
| A4# | H3 | Source_Synch |
| VSS | H4 | Power/Other |
| VCC | H5 | Power/Other |
| VSS | H6 | Power/Other |
| VCC | H7 | Power/Other |
| VSS | H8 | Power/Other |
| VCC | H9 | Power/Other |
| VSS | H10 | Power/Other |
| VCC | H11 | Power/Other |
| VSS | H12 | Power/Other |
| VCC | H13 | Power/Other |
| VSS | H14 | Power/Other |
| VCC | H15 | Power/Other |
| VSS | H16 | Power/Other |

VIA Technologies Inc.
Confidential
NDA Required

## Table 5-2. Signal Listing in Order by Ball Number (Continued)

| Ball Name | Ball No | Type |
|---|---|---|
| COMP0 | H17 | Power/Other |
| D15# | H18 | Source_Synch |
| DINV0# | H19 | Source_Synch |
| D5# | H20 | Source_Synch |
| A5# | J1 | Source_Synch |
| A7# | J2 | Source_Synch |
| A13# | J3 | Source_Synch |
| VSS | J4 | Power/Other |
| VSS | J5 | Power/Other |
| VCC | J6 | Power/Other |
| VSS | J7 | Power/Other |
| VCC | J8 | Power/Other |
| VSS | J9 | Power/Other |
| VCC | J10 | Power/Other |
| VSS | J11 | Power/Other |
| VCC | J12 | Power/Other |
| VSS | J13 | Power/Other |
| VCC | J14 | Power/Other |
| VSS | J15 | Power/Other |
| VCC | J16 | Power/Other |
| VSS | J17 | Power/Other |
| D12# | J18 | Source_Synch |
| VSS | J19 | Power/Other |
| DP0# | J20 | Source_Synch |
| A8# | K1 | Source_Synch |
| VSS | K2 | Power/Other |
| A10# | K3 | Source_Synch |
| VSS | K4 | Power/Other |
| VCC | K5 | Power/Other |
| VSS | K6 | Power/Other |
| VCC | K7 | Power/Other |
| VSS | K8 | Power/Other |
| VCC | K9 | Power/Other |
| VSS | K10 | Power/Other |
| VCC | K11 | Power/Other |
| VSS | K12 | Power/Other |
| VCC | K13 | Power/Other |
| VSS | K14 | Power/Other |
| VCC | K15 | Power/Other |

| Ball Name | Ball No | Type |
|---|---|---|
| VSS | K16 | Power/Other |
| VCCP | K17 | Power/Other |
| VSS | K18 | Power/Other |
| D21# | K19 | Source_Synch |
| D22# | K20 | Source_Synch |
| A15# | L1 | Source_Synch |
| A11# | L2 | Source_Synch |
| A12# | L3 | Source_Synch |
| VCCP | L4 | Power/Other |
| VSS | L5 | Power/Other |
| VCC | L6 | Power/Other |
| VSS | L7 | Power/Other |
| VCC | L8 | Power/Other |
| VSS | L9 | Power/Other |
| VCC | L10 | Power/Other |
| VSS | L11 | Power/Other |
| VCC | L12 | Power/Other |
| VSS | L13 | Power/Other |
| VCC | L14 | Power/Other |
| VSS | L15 | Power/Other |
| VCC | L16 | Power/Other |
| VCCP | L17 | Power/Other |
| D17# | L18 | Source_Synch |
| D16# | L19 | Source_Synch |
| VSS | L20 | Power/Other |
| A16# | M1 | Source_Synch |
| VSS | M2 | Power/Other |
| A14# | M3 | Source_Synch |
| VSS | M4 | Power/Other |
| VCCP | M5 | Power/Other |
| VSS | M6 | Power/Other |
| VCC | M7 | Power/Other |
| VSS | M8 | Power/Other |
| VCC | M9 | Power/Other |
| VSS | M10 | Power/Other |
| VCC | M11 | Power/Other |
| VSS | M12 | Power/Other |
| VCC | M13 | Power/Other |
| VSS | M14 | Power/Other |

VIA Technologies Inc. Confidential NDA Required

## Table 5-2. Signal Listing in Order by Ball Number (Continued)

| Ball Name | Ball No | Type |
|---|---|---|
| VCC | M15 | Power/Other |
| VSS | M16 | Power/Other |
| VSS | M17 | Power/Other |
| VSS | M18 | Power/Other |
| D29# | M19 | Source_Synch |
| D20# | M20 | Source_Synch |
| A30# | N1 | Source_Synch |
| A17# | N2 | Source_Synch |
| A18# | N3 | Source_Synch |
| RSVD | N4 | Reserved |
| VSS | N5 | Power/Other |
| VCC | N6 | Power/Other |
| VSS | N7 | Power/Other |
| VCC | N8 | Power/Other |
| VSS | N9 | Power/Other |
| VCC | N10 | Power/Other |
| VSS | N11 | Power/Other |
| VCC | N12 | Power/Other |
| VSS | N13 | Power/Other |
| VCC | N14 | Power/Other |
| VSS | N15 | Power/Other |
| VCC | N16 | Power/Other |
| VSS | N17 | Power/Other |
| DINV1# | N18 | Source_Synch |
| VSS | N19 | Power/Other |
| D23# | N20 | Source_Synch |
| CF0 | P1 | Power/Other |
| CF3 | P2 | Power/Other |
| CF6 | P3 | Power/Other |
| CF8 | P4 | Power/Other |
| VCCP | P5 | Power/Other |
| VSS | P6 | Power/Other |
| VCC | P7 | Power/Other |
| VSS | P8 | Power/Other |
| VCC | P9 | Power/Other |
| VSS | P10 | Power/Other |
| VCC | P11 | Power/Other |
| VSS | P12 | Power/Other |
| VCC | P13 | Power/Other |

| Ball Name | Ball No | Type |
|---|---|---|
| VSS | P14 | Power/Other |
| VCC | P15 | Power/Other |
| VSS | P16 | Power/Other |
| VSS | P17 | Power/Other |
| D26# | P18 | Source_Synch |
| D25# | P19 | Source_Synch |
| VSS | P20 | Power/Other |
| CF1 | R1 | Power/Other |
| CF4 | R2 | Power/Other |
| CF7 | R3 | Power/Other |
| VCCP | R4 | Power/Other |
| VSS | R5 | Power/Other |
| VCC | R6 | Power/Other |
| VSS | R7 | Power/Other |
| VCC | R8 | Power/Other |
| VSS | R9 | Power/Other |
| VCC | R10 | Power/Other |
| VSS | R11 | Power/Other |
| VCC | R12 | Power/Other |
| VSS | R13 | Power/Other |
| VCC | R14 | Power/Other |
| VSS | R15 | Power/Other |
| VCC | R16 | Power/Other |
| VCCP | R17 | Power/Other |
| DP1# | R18 | Source_Synch |
| D24# | R19 | Source_Synch |
| D31# | R20 | Source_Synch |
| CF2 | T1 | Power/Other |
| CF5 | T2 | Power/Other |
| COMP2 | T3 | Power/Other |
| VSS | T4 | Power/Other |
| VCC | T5 | Power/Other |
| VSS | T6 | Power/Other |
| VCC | T7 | Power/Other |
| VSS | T8 | Power/Other |
| VCC | T9 | Power/Other |
| VSS | T10 | Power/Other |
| VCC | T11 | Power/Other |
| VSS | T12 | Power/Other |

VIA Technologies Inc.
Confidential
NDA Required

## Table 5-2. Signal Listing in Order by Ball Number (Continued)

| Ball Name | Ball No | Type |
|---|---|---|
| VCC | T13 | Power/Other |
| VSS | T14 | Power/Other |
| VCC | T15 | Power/Other |
| VSS | T16 | Power/Other |
| VSS | T17 | Power/Other |
| D30# | T18 | Source_Synch |
| VSS | T19 | Power/Other |
| DSTBN1# | T20 | Source_Synch |
| BREQ1# | U1 | Common_Clock |
| RSVD | U2 | Reserved |
| VCC SENSE | U3 | Power/Other |
| VSS SENSE | U4 | Power/Other |
| MPI | U5 | CMOS |
| VSS | U6 | Power/Other |
| VSS | U7 | Power/Other |
| VCCP | U8 | Power/Other |
| VCCP | U9 | Power/Other |
| VSS | U10 | Power/Other |
| VCCP | U11 | Power/Other |
| VSS | U12 | Power/Other |
| VCCP | U13 | Power/Other |
| VCCP | U14 | Power/Other |
| VSS | U15 | Power/Other |
| VSS | U16 | Power/Other |
| VCCP | U17 | Power/Other |
| D27# | U18 | Source_Synch |
| D18# | U19 | Source_Synch |
| DSTBP1# | U20 | Source_Synch |
| VCCP | V1 | Power/Other |
| VCCP | V2 | Power/Other |
| D58# | V3 | Source_Synch |
| D62# | V4 | Source_Synch |
| DINV3# | V5 | Source_Synch |
| D56# | V6 | Source_Synch |
| D61# | V7 | Source_Synch |
| D63# | V8 | Source_Synch |
| D57# | V9 | Source_Synch |
| D50# | V10 | Source_Synch |
| DP2# | V11 | Source_Synch |

| Ball Name | Ball No | Type |
|---|---|---|
| D46# | V12 | Source_Synch |
| D33# | V13 | Source_Synch |
| D47# | V14 | Source_Synch |
| DSTBN2# | V15 | Source_Synch |
| D36# | V16 | Source_Synch |
| DINV2# | V17 | Source_Synch |
| D39# | V18 | Source_Synch |
| D19# | V19 | Source_Synch |
| VSS | V20 | Power/Other |
| RSVD | W1 | Reserved |
| VCCP | W2 | Power/Other |
| VSS | W3 | Power/Other |
| D51# | W4 | Source_Synch |
| D55# | W5 | Source_Synch |
| VSS | W6 | Power/Other |
| D52# | W7 | Source_Synch |
| D54# | W8 | Source_Synch |
| VSS | W9 | Power/Other |
| D48# | W10 | Source_Synch |
| VSS | W11 | Power/Other |
| D40# | W12 | Source_Synch |
| VSS | W13 | Power/Other |
| D44# | W14 | Source_Synch |
| DSTBP2# | W15 | Source_Synch |
| VSS | W16 | Power/Other |
| D35# | W17 | Source_Synch |
| D38# | W18 | Source_Synch |
| VSS | W19 | Power/Other |
| D28# | W20 | Source_Synch |
| RSVD | Y1 | Reserved |
| VSS | Y2 | Power/Other |
| D59# | Y3 | Source_Synch |
| D60# | Y4 | Source_Synch |
| DSTBN3# | Y5 | Source_Synch |
| DSTBP3# | Y6 | Source_Synch |
| VSS | Y7 | Power/Other |
| D4# | Y8 | Source_Synch |
| D53# | Y9 | Source_Synch |
| DP3# | Y10 | Source_Synch |

VIA Technologies Inc.
Confidential
NDA Required

## Table 5-2. Signal Listing in Order by Ball Number (Continued)

| Ball Name | Ball No | Type |
|---|---|---|
| D45# | Y11 | Source_Synch |
| D32# | Y12 | Source_Synch |
| D42# | Y13 | Source_Synch |
| D41# | Y14 | Source_Synch |
| VSS | Y15 | Power/Other |
| D43# | Y16 | Source_Synch |
| D34# | Y17 | Source_Synch |
| VSS | Y18 | Power/Other |
| D37# | Y19 | Source_Synch |
| RSVD | Y20 | Reserved |

VIA Technologies Inc.
Confidential
NDA Required

## Figure 5-2. nanoBGA2 Dimensions

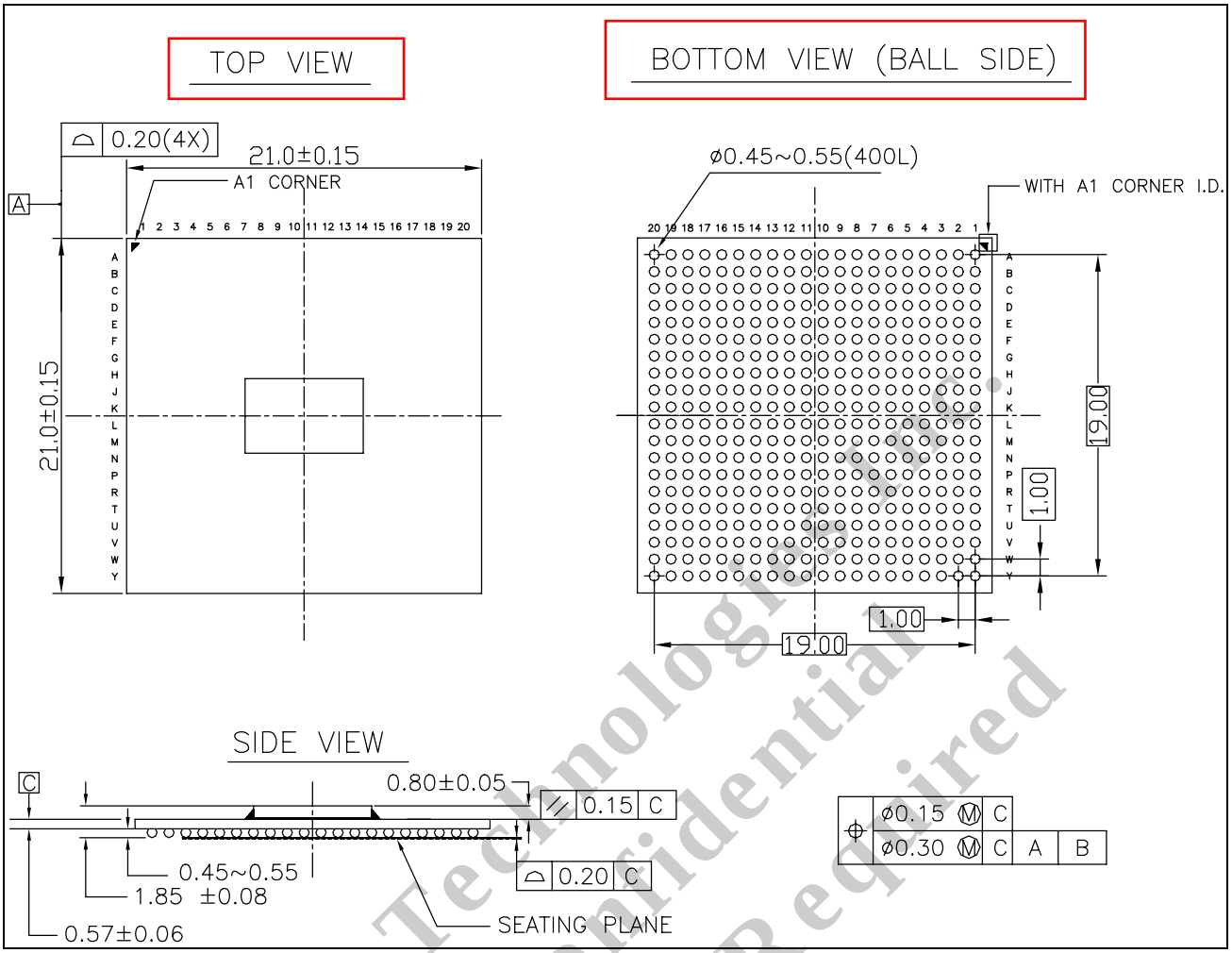


## Table 5-3. Signal Listing in Order by Ball Number

| Parameter | Measurement | Unit |
|---|---|---|
| Overall height, as delivered | 1.85 | mm |
| Die height | 0.80 | mm |
| Ball diameter | 0.60 | mm |
| Package substrate length | 21.0±0.15 | mm |
| Package substrate width | 21.0±0.15 | mm |
| Substrate thickness | 0.57±0.06 | mm |
| Ball pitch | 1.00 | mm |
| Ball count | 400 | -- |
| Solder ball coplanarity | 0.20 | mm |

VIA Technologies, Inc.
Confidential
NDA Required

This page is intentionally left blank.

VIA Technologies Inc.
Confidential
NDA Required

SECTION

6

# THERMAL SPECIFICATIONS

VIA Technologies Inc.
Confidential
NDA Required

## 6.1 INTRODUCTION

The VIA C7 is specified for operation with device case temperatures in the range of 0°C to 100°C. Operation outside of this range will result in functional failures and may potentially damage the device.

Care must be taken to ensure that the case temperature remains within the specified range at all times during operation. An effective heat sink with adequate airflow is therefore a requirement during operation.

## 6.2 TYPICAL ENVIRONMENTS

Typical thermal solutions involve three components: a heat sink, an interface material between the heat sink and the package, and a source of airflow. The best thermal solutions rely on the use of all three components. To the extent that any of these components are not used, the other components must be improved to compensate for such omission. In particular, the use of interface material such as thermal grease, silicone paste, or graphite paper can make a 40°C difference in the case temperature. Likewise, the imposition of airflow is realistically a requirement.

## 6.3 MEASURING $T_C$

The case temperature ($T_C$) should be measured by attaching a thermocouple to the center of the VIA C7 package. The heat produced by the processor is very localized so measuring the case temperature anywhere else will underestimate the case temperature.

The presence of a thermocouple is inherently invasive; effort must be taken to minimize the effect of the measurement. The thermocouple should be attached to the processor through a small hole drilled in the

heat sink. Thermal grease should be used to ensure that the thermocouple makes good contact with the package, but the thermocouple should not come in direct contact with the heat sink.

### Physical Test Conditions

Case temperature measurements should be made in the worst case operating environments. Ideally, systems should be maximally configured, and tested at the worst-case ambient temperature.

### Test Patterns

During normal operation the processor attempts to minimize power consumption. Consequently, normal power consumption is much lower than the maximum power consumption. Thermal testing should be done while running software which causes the processor to operate at its thermal limits.

## 6.4 MEASURING $T_J$

The junction temperature of the die can be measured by using the processor's on-chip diode.

## 6.5 ESTIMATING $T_C$

The VIA C7 processor's case temperature can be estimated based on the general characteristics of the thermal environment. This estimate is not intended as a replacement for actual measurement.

Case temperature can be estimated where,

$T_A \equiv$ Ambient Temperature

$T_C \equiv$ Case Temperature

$\theta_{CA} \equiv$ case-to-ambient thermal resistance

$\theta_{JA} \equiv$ junction-to-ambient thermal resistance

$\theta_{JC} \equiv$ junction-to-case thermal resistance ()

$P \equiv$ power consumption (Watts)

and,

The nanoBGA2 has $\theta_{JC}$ =0.2°C/W.

$T_J = T_C + (P * \theta_{JC})$

$T_A = T_J - (P * \theta_{JA})$

$T_A = T_C - (P * \theta_{CA})$

$\theta_{CA} = \theta_{JA} - \theta_{JC}$

VIA Technologies Inc.
Confidential
NDA Required

## 6.6 THERMAL MONITOR

The VIA C7 processor provides an advanced mechanism for thermal management called the Thermal Monitor. In short, the processor has a second on-die thermal diode that is software accessible and allows a variety of actions based upon the current die temperature.

The processor will use a thermal feature when a pre-defined or user defined temperature threshold is met. The thermal feature will remain in use until the processor temperature is lowered as determined by the thermal monitor diode. Hysteresis is taken into account.

### 6.6.1 ON-DEMAND CLOCK MODULATION

On demand clock modulation allows the processor to assert an internal stop-clock duty cycle for thermal management. The throttling duty-cycle is user-defined.

See BIOS Writer's Guide for more details.

### 6.6.2 THERMAL MONITOR 1 AND THERMAL MONITOR 2

Thermal Monitor 1 or TM1 allows the processor to assert an internal power throttling state based upon pre-defined or user defined temperature thresholds. The throttling duty-cycle is pre-defined.

Thermal Monitor 2 or TM2 allows the processor to shift to a low-power performance state based upon pre-defined or user defined temperature thresholds. PowerSaver must be enabled for Thermal Monitor 2 to operate.

Thermal Monitor 1and Thermal Monitor 2 are mutually exclusive: system BIOS must choose which thermal protection mechanism to use. VIA strongly recommends the use of TM2 over TM1.

See BIOS Writer's Guide for more details.

### 6.6.3 APIC CONSIDERATIONS

The thermal monitor can generate an interrupt if the thermal monitor temperature threshold is tripped and the thermal entry is programmed into the processor's APIC LVT.

See BIOS Writer's Guide for more details.

### 6.6.4 USER DEFINED TEMPERATURE THRESHOLD

System designers may elect to use a specific trip point for thermal management.

Program the desired temperature in hexadecimal into MSR 0x1167.

VIA Technologies Inc.
Confidential
NDA Required

SECTION

7

# MACHINE SPECIFIC REGISTERS

VIA Technologies Inc.
Confidential
NDA Required

## 7.1 GENERAL

Table 7-1 and Table 7-2 summarize the VIA C7 processor machine-specific registers (MSRs). Further description of each MSR follows the table. MSRs are read using the RDMSR instruction and written using the WRMSR instruction.

There are four basic groups of MSRs (not necessarily with contiguous addresses). Other than as defined below, a reference to an undefined MSR causes a General Protection exception.

1. Generally these registers can have some utility to low-level programs (like BIOS).

   Note that some of the MSRs (address 0 to 0x4FF) have no function in the VIA C7 processor. These MSRs do not cause a GP when used on the VIA C7 processor; instead, reads to these MSRs return zero, and writes are ignored. Some of these undocumented MSRs may have ill side effects when written to indiscriminately. Do not write to undocumented MSRs.

2. There are some undocumented internal-use MSRs used for low-level hardware testing purposes. Attempts to read or write these undocumented MSRs cause unpredictable and disastrous results; so don't use MSRs that are not documented in this datasheet.

3. MSRs used for cache and TLB testing. These use MSR addresses that are not used on compatible processor. These test functions are very low-level and complicated to use.

*MSRs are not reinitialized by the bus INIT interrupt; the setting of MSRs is preserved across INIT.*

## Table 7-1. Category 1 MSRs

| MSR | MSR NAME | ECX | EDX | EAX | TYPE | NOTES |
|---|---|---|---|---|---|---|
| TSC | Time Stamp Counter | 10h | TSC[63:32] | TSC[31:0] | RW | |
| EBL_CR_POWERON | EBL_CR_POWERON | 2Ah | n/a | Control bits | RW | |
| PERFCTR0 | Performance counter 0 | C1h | TSC[39:32] | TSC[31:0] | RW | 1 |
| PERFCTR1 | Performance counter 1 | C2h | 0 | Count[31:0] | RW | |
| BBL_CR_CTL3 | L2 Hardware Disabled | 11Eh | n/a | 00800000h | RO | |
| EVNTSEL0 | Event counter 0 select | 186h | n/a | 00470079h | RO | 1 |
| EVNTSEL1 | Event counter 1 select | 187h | n/a | Control bits | RW | |
| MTRR | MTRRphysBase0 | 200h | Control bits | Control bits | RW | |
| MTRR | MTRRphysMask0 | 201h | Control bits | Control bits | RW | |
| MTRR | MTRRphysBase1 | 202h | Control bits | Control bits | RW | |
| MTRR | MTRRphysMask1 | 203h | Control bits | Control bits | RW | |
| MTRR | MTRRphysBase2 | 204h | Control bits | Control bits | RW | |
| MTRR | MTRRphysMask2 | 205h | Control bits | Control bits | RW | |
| MTRR | MTRRphysBase3 | 206h | Control bits | Control bits | RW | |
| MTRR | MTRRphysMask3 | 207h | Control bits | Control bits | RW | |
| MTRR | MTRRphysBase4 | 208h | Control bits | Control bits | RW | |
| MTRR | MTRRphysMask4 | 209h | Control bits | Control bits | RW | |
| MTRR | MTRRphysBase5 | 20Ah | Control bits | Control bits | RW | |
| MTRR | MTRRphysMask5 | 20Bh | Control bits | Control bits | RW | |
| MTRR | MTRRphysBase6 | 20Ch | Control bits | Control bits | RW | |
| MTRR | MTRRphysMask6 | 20Dh | Control bits | Control bits | RW | |
| MTRR | MTRRphysBase7 | 20Eh | Control bits | Control bits | RW | |
| MTRR | MTRRphysMask7 | 20Fh | Control bits | Control bits | RW | |
| MTRR | MTRRfix64K_00000 | 250h | Control bits | Control bits | RW | |
| MTRR | MTRRfix16K_80000 | 258h | Control bits | Control bits | RW | |
| MTRR | MTRRfix16K_A0000 | 259h | Control bits | Control bits | RW | |
| MTRR | MTRRfix4K_C0000 | 268h | Control bits | Control bits | RW | |
| MTRR | MTRRfix4K_C8000 | 269h | Control bits | Control bits | RW | |
| MTRR | MTRRfix4K_D0000 | 26Ah | Control bits | Control bits | RW | |
| MTRR | MTRRfix4K_D8000 | 26Bh | Control bits | Control bits | RW | |
| MTRR | MTRRfix4K_E0000 | 26Ch | Control bits | Control bits | RW | |
| MTRR | MTRRfix4K_E8000 | 26Dh | Control bits | Control bits | RW | |
| MTRR | MTRRfix4K_F0000 | 26Eh | Control bits | Control bits | RW | |
| MTRR | MTRRfix4K_F8000 | 26Fh | Control bits | Control bits | RW | |
| MTRR | MTRRdefType | 2FFh | Control bits | Control bits | RW | |

VIA Technologies Inc. Confidential NDA Required

**Notes:**

1. PERFCTR0 is an alias for the lower 40 bits of the Time Stamp Counter. EVNTSEL0 is a read only MSR that reflects this limitation.

**Table 7-2. Category 2 MSRs**

| MSR | MSR NAME | ECX | EDX | EAX | TYPE | NOTES |
|---|---|---|---|---|---|---|
| FCR | Feature Control Reg | 1107h | n/a | FCR value | RW | |
| FCR2 | Feature Control Reg 2 | 1108h | FCR2_Hi | FCR2 value | RW | 1 |
| FCR3 | Feature Control Reg 3 | 1109h | FCR3_Hi | FCR3 value | WO | 1 |

**Notes:**

1. FCR2 and FCR3 provide system software with the ability to specify the Vendor ID string returned by the CPUID instruction.

## 7.2 CATEGORY 1 MSRS

### 10H: TSC (TIME STAMP COUNTER)

VIA C7 processor has a 64-bit MSR that materializes the Time Stamp Counter (TSC). System increments the TSC once per processor clock. The TSC is incremented even during AutoHalt or StopClock. A WRMSR to the TSC will clear the upper 32 bits of the TSC.

### 2AH: EBL_CR_POWERON

| 31:27 | 27 | 26 | 25:22 | 21:20 | 19:18 | 17:15 | 14 | 13 | 12:0 |
|---|---|---|---|---|---|---|---|---|---|
| *Res '11000'* | BF4 | Low-PowerEn '1' | BF[3:0] | *Res* | BSEL | *Res* | 1MPOV | IOQDepth | *Reserved (Ignored on write; returns 0 on read)* |
| 5 | 1 | 1 | 4 | 2 | 2 | 3 | 1 | 1 | 13 |

**IOQDepth:** 0 = In Order Queue Depth with up to 8 transactions
1 = 1 transaction

**1MPOV:** 0 = Power on Reset Vector at 0xFFFFFFF0 (4Gbytes)
1 = Power on Reset Vector at 0x000FFFF0 (1 Mbyte)

**BSEL:** 01 = 133 MHz Bus
10 = 100 MHz Bus

VIA Technologies Inc. Confidential NDA Required

BF[4:0]: Core-to-Bus Frequency Ratio

**Table 7-3. Core-to-Bus Frequency Ratio**

| Core Ratio | MSR 0x2A [27] | MSR 0x2A [25:22] |
|---|---|---|
| 4 | 0 | 0100b |
| 5 | 0 | 0101b |
| 6 | 0 | 0110b |
| 7 | 0 | 0111b |
| 8 | 0 | 1000b |
| 9 | 0 | 1001b |
| 10 | 0 | 1010b |
| 11 | 0 | 1011b |
| 12 | 0 | 1100b |
| 13 | 0 | 1101b |
| 14 | 0 | 1110b |
| 15 | 0 | 1111b |
| 16 | 1 | 0000b |
| 17 | 1 | 0001b |
| 18 | 1 | 0010b |
| 19 | 1 | 0011b |
| 20 | 1 | 0100b |
| 21 | 1 | 0101b |
| 22 | 1 | 0110b |
| 23 | 1 | 0111b |
| 24 | 1 | 1000b |
| 25 | 1 | 1001b |

**LowPowerEn:** This bit always set to '1'

VIA Technologies Inc.
Confidential
NDA Required

## C1H-C2H: PERFCTR0 & PERFCTR1

These are events counters 0 and 1. VIA C7 processor's PERFCTR0 is an alias for the lower 40 bits of the TSC.

## 11EH: BBL_CR_CTL3

| 31:24 | 23 | 22:0 |
|---|---|---|
| *Reserved* | L2_Hdw_Disable<br>'1' | *Reserved*<br>*(Ignored on write;*<br>*returns 0 on read)* |
| 8 | 1 | 23 |

The VIA C7 processor does contain an L2 cache. For compatibility, this read-only MSR indicates to the BIOS or system software that the L2 is disabled even if the L2 is enabled.

**L2_Hdw_Disable:** This bit always set to '1'

## 186H: EVNTSEL0 (EVENT COUNTER 0 SELECT)

| 31:24 | 23:16 | 15:9 | 8:0 |
|---|---|---|---|
| *Reserved* | *Reserved* | *Reserved* | CTR0 Event Select = 79h |
| 8 | 8 | 7 | 9 |

PERFCTR0 is an alias for the lower 40 bits of the Time Stamp Counter. EVNTSEL0 is a read only MSR which reflects this limitation. The CTR0_Event Select field always returns 0x0079, which corresponds to counting of processor clocks.

## 187H: EVNTSEL1 (EVENT COUNTER 1 SELECT)

| 31:24 | 23:16 | 15:9 | 8:0 |
|---|---|---|---|
| *Reserved* | *Reserved* | *Reserved* | CTR1 Event Select |
| 8 | 8 | 7 | 9 |

VIA C7 processor have two MSRs that contain bits defining the behavior of the two hardware event counters: PERFCTR0 and PERFCTR1.

The CTR1_Event_Select control field defines which of several possible events is counted. The possible Event Select values for PERFCTR1 are listed in the table below. Note that CTR1_Event_Select is a 9-bit field.

The EVNTSEL1 register should be written before PERFCTR1 is written to initialize the counter. The counts are not necessarily perfectly exact; the counters are intended for use over a large number of events and may differ by one or two counts from what might be expected.

Most counter events are internal implementation-dependent debug functions, having no meaning to software. The counters that can have end-user utility are:

| EVENT | DESCRIPTION |
|---|---|
| C0h | Instructions executed |
| 1C0h | Instructions executed and string iterations |
| 79h | Internal clocks (default event for CTR0) |

VIA Technologies Inc.
Confidential
NDA Required

## 7.3 CATEGORY 2 MSRS

### 1107H: FCR (FEATURE CONTROL REGISTER)

The FCR controls the major optional feature capabilities of the VIA C7 processor. Table 7-4 contains the bit values for the FCR. The default settings shown for the FCR bits are not necessarily exact. The actual settings can be changed as part of the manufacturing process and thus a particular VIA C7 processor version can have slightly different default settings than shown here. All reserved bit values of the FCR must be preserved by using a read-modify-write sequence to update the FCR.

**Table 7-4. FCR Bit Assignments**

| BIT | NAME | DESCRIPTION | DEFAULT |
|---|---|---|---|
| 0 | RSVD | *Reserved* | 0 |
| 1 | ECX8 | Enables CPUID reporting CMPXCHG8B | 1 |
| 7:2 | | *Reserved* | 0 |
| 8 | DL2 | Disables L2 Cache | 0 |
| 63:9 | | *Reserved* | 0/1 |

**ECX8:** 0 = The CPUID instruction does not report the presence of the CMPXCHG8B instruction (CX8 = 0). The instruction actually exists and operates correctly, however.

1 = The CPUID instruction reports that the CMPXCHG8B instruction is supported (CX8 = 1).

**DL2:** 0 = L2 Cache enabled.

1 = L2 Cache disabled.

### 1108H: FCR2 (FEATURE CONTROL REGISTER 2)

This MSR contains more feature control bits — many of which are undefined. It is important that all reserved bits are preserved by using a read-modify-write sequence to update the MSR.

| 63:32 |
|---|
| Last 4 characters of Alternate Vendor ID string |

| 31:15 | 14 | 13:12 | 11:8 | 7:4 | 3:0 |
|---|---|---|---|---|---|
| *Reserved* | AVS | *Res* | Family ID | Model ID | *Res* |
| 17 | 1 | 2 | 4 | 4 | 4 |

**AVS:** 0 = The CPUID instruction vendor ID is "CentaurHauls"

1 = The CPUID instruction returns the alternate Vendor ID. The first 8 characters of the alternate Vendor ID are stored in FCR3 and the last 4 characters in FCR2[63:32]. These 12 characters are undefined after RESET and may be loaded by system software using WRMSR.

VIA Technologies, Inc. Confidential NDA Required

**Family ID:** This field will be returned as the family ID field by subsequent uses of the CPUID instruction

**Model ID:** This field will be returned as the model ID field by subsequent uses of the CPUID instruction

VIA Technologies Inc.
Confidential
NDA Required

## 1109H: FCR3 (FEATURE CONTROL REGISTER 3)

This MSR contains the first 8 characters of the alternate Vendor ID. The alternate Vendor ID is returned by the CPUID instruction when FCR2[AVS] is set to '1'. FCR3 is a write-only MSR.

| 63:32 |
|---|
| First 4 characters of Alternate Vendor ID string |

| 31:0 |
|---|
| Middle 4 characters of Alternate Vendor ID string |

VIA Technologies Inc.
Confidential
NDA Required